PROJECT PF 225

STANDARD FENCE DETAILS

DATE: APRIL 2, 2008

CONTRACT NO:
TASK NO:

US Army Corps
of Engineers
Fort Worth District

TITLE	DRAWING NO.	CADD FILE NO.
COVER		TITLE.DWG
INDEX	I–1, SHEET 1 OF 1	INDEX.DWG

STRUCTURAL

GENERAL NOTES	N–1, SHEET 1 OF 1	NOTES.DWG
PERSONNEL – TYPE 1 ELEVATION	P–1, SHEET 1 OF 2	P–1.DWG
PERSONNEL – TYPE 1 DETAILS	P–1, SHEET 2 OF 2	P–1.DWG
PERSONNEL – TYPE 2 ELEVATION	P–2, SHEET 1 OF 2	P–2.DWG
PERSONNEL – TYPE 2 DETAILS	P–2, SHEET 2 OF 2	P–2.DWG
PERSONNEL – TYPE 3A–15 ELEVATION	P–3A–15, SHEET 1 OF 2	P–3A–15.DWG
PERSONNEL – TYPE 3A–15 DETAILS	P–3A–15, SHEET 2 OF 2	P–3A–15.DWG
PERSONNEL – TYPE 3B–15 DETAILS	P–3B–15, SHEET 1 OF 1	P–3B–15.DWG
PERSONNEL – TYPE 3C–15 DETAILS	P–3C–15, SHEET 1 OF 2	P–3C–15.DWG
PERSONNEL – TYPE 3C–15 DETAILS	P–3C–15, SHEET 2 OF 2	P–3C–15.DWG
PERSONNEL – TYPE 3A–18 ELEVATION	P–3A–18, SHEET 1 OF 2	P–3A–18.DWG
PERSONNEL – TYPE 3A–18 DETAILS	P–3A–18, SHEET 2 OF 2	P–3A–18.DWG
PERSONNEL – TYPE 3C–18 ELEVATION	P–3C–18, SHEET 1 OF 2	P–3C–18.DWG
PERSONNEL – TYPE 3C–18 ELEVATION	P–3C–18, SHEET 2 OF 2	P–3C–18.DWG
PERSONNEL – VEHICLE TYPE 1 DETAILS	PV–1, SHEET 1 OF 2	PV–1.DWG
PERSONNEL – VEHICLE TYPE 1 DETAILS	PV–1, SHEET 2 OF 2	PV–1.DWG
PERSONNEL – VEHICLE TYPE 2 ELEVATION	PV–2, SHEET 1 OF 2	PV–2.DWG
PERSONNEL – VEHICLE TYPE 2 DETAILS	PV–2, SHEET 2 OF 2	PV–2.DWG
PERSONNEL – VEHICLE TYPE 3 ELEVATION	PV–3, SHEET 1 OF 2	PV–3.DWG
PERSONNEL – VEHICLE TYPE 3 DETAILS	PV–3, SHEET 2 OF 2	PV–3.DWG
PERSONNEL – VEHICLE TYPE 4 ELEVATION	PV–4, SHEET 1 OF 2	PV–4.DWG
PERSONNEL – VEHICLE TYPE 4 DETAILS	PV–4 SHEET 2 OF 2	PV–4.DWG
GATE 12' PERSONNEL – VEHICLE DETAILS	G–1, SHEET 1 OF 2	G–1.DWG
GATE 12' PERSONNEL – VEHICLE DETAILS	G–1, SHEET 2 OF 2	G–1.DWG
GATE 5' PERSONNEL DETAIL	G–2, SHEET 1 OF 1	G–2.DWG
DRAINAGE FENCE DETAIL	DC–1, SHEET 1 OF 1	DC–1.DWG

US Army Corps of Engineers
Fort Worth District

Mark	Description	Date	Appr.

Baker
MICHAEL BAKER JR., INC.
2929 NORTH CENTRAL AVENUE
SUITE 830
PHOENIX, AZ 85012

Designed by: MKB	Date: 4-2-08	Rev.
Dwn by: MKB	Ckd by: JWB	Submitted by: Michael Baker Jr., Inc.
Reviewed by: TQ		Plot date: 4/3/08
		Baker Project No: 112319

PF225 STANDARD FENCE DETAILS

INDEX

SHEET REFERENCE NUMBER:
I-1
SHEET 1 OF 1

h:\projects\usace\pf225\drawings\pf225\index.dwg

A. GENERAL STRUCTURAL NOTES:

1. SHOP DRAWINGS OF ALL FABRICATED ITEMS SHALL BE SUBMITTED FOR REVIEW ACCORDING TO THE SPECIFICATIONS.

2. AS SITE TERRAIN CONDITIONS ALLOW, FENCE PANELS MAY BE STEPPED 1'–0" MAXIMUM. IN STEEPER TERRAIN FENCE PANELS MAY BE DETAILED AND CONSTRUCTED TO FOLLOW THE SLOPE AT THE APPROVAL OF THE ENGINEER. DETAILS NOT SPECIFICALLY INDICATED SHALL BE SIMILAR TO DETAILS SHOWN. P–3A–15, P–3B–15, P–3A–18, AND PV–3 FOUNDATIONS ARE DESIGNED TO BE INSTALLED PARALLEL TO FLAT OR SLIGHTLY SLOPED TERRAIN. ABRUPT OR STEEP TERRAIN REQUIRE SPECIAL DESIGN.

3. DESIGN CODES:

A. ALL DESIGN AND CONSTRUCTION SHALL CONFORM TO THE 2006 IBC BUILDING CODE.

B. BUILDING CODE REQUIREMENTS FOR REINFORCED CONCRETE (ACI 318)

C. SPECIFICATION FOR THE DESIGN, FABRICATION, AND ERECTION OF STRUCTURAL STEEL FOR BUILDINGS (AISC)

D. SPECIFICATIONS FOR STRUCTURAL CONCRETE FOR BUILDINGS (ACI 301) AND ACI MANUAL OF CONCRETE PRACTICE.

E. AASHTO STANDARD SPECIFICATIONS FOR HIGHWAY BRIDGES 17TH EDITION–2002.

F. AMERICAN WELDING SOCIETY STANDARDS AND SPECIFICATIONS. (AWS)

(1) AWS D1.1 "STRUCTURAL WELDING CODE - STEEL."

(2) AWS D1.4 "STRUCTURAL WELDING CODE - REINFORCING STEEL."

4. DESIGN LOADS:

WIND: (WIND PRESSURES SHALL BE PRESCRIBED IN THE 2006 IBC BUILDING CODE)

BASIC WIND SPEED (3 SEC. GUST)	90 MPH
IMPORTANCE FACTOR	1.0
EXPOSURE CATEGORY	C

REGIONS NEAR THE GULF OF MEXICO (ZAPATA, STARR, HIDALGO, CAMERON COUNTIES) REQUIRE HIGHER WIND LOADS. STANDARD FENCE DESIGNS P–1, P–2, AND PV–1 SATISFY THIS REQUIREMENT. ALL OTHER STANDARD FENCE DESIGNS SHALL BE REDESIGNED FOR USE IN THIS HIGH WIND REGION.

VEHICLE BARRIER SYSTEM: 10 KIP HIGHWAY DESIGN LOADING PER AASHTO STANDARD SPECIFICATIONS FOR HIGHWAY BRIDGES 17TH EDITION–2002 SECTION 2.7.1–VEHICULAR RAILING. STANDARD FENCE DESIGNS PV–1, PV–2, AND PV–3 SATISFY THIS REQUIREMENT.

LOAD COMBINATIONS: SHALL CONFORM TO IBC 2006.

5. ASSUMED DESIGN TEMPERATURE DIFFERENTIAL FOR EXPOSED PORTIONS OF THE STRUCTURE SHALL BE +/– 60 DEGREES.

6. PROVIDE ADEQUATE SHORING OR BRACING DURING CONSTRUCTION TO RESIST FORCES SUCH AS WIND AND UNBALANCED LOADING DUE TO CONSTRUCTION.

B. FOUNDATIONS:

1. FOUNDATION DETAILS SHOWN ON THE STANDARD FENCE DESIGNS REPRESENT MINIMUM DIMENSIONAL AND MATERIAL REQUIREMENTS. THE DESIGN–BUILD CONTRACTOR IS RESPONSIBLE FOR COMPLETING FOUNDATION DESIGN BASED ON SECTIONS 3 (DESIGN CODES) AND 4 (DESIGN LOADS), AS WELL AS SITE SPECIFIC CONDITIONS AT THE DIRECTION OF A REGISTERED PROFESSIONAL ENGINEER.

2. FINAL GRADING SHALL BE SLOPED AWAY FROM THE FENCE TO MINIMIZE PONDING WATER.

C. CONCRETE:

1. CONCRETE USED IN THE WORK SHALL HAVE 3000 PSI MINIMUM COMPRESSIVE STRENGTH AT 28 DAYS.

D. REINFORCING STEEL:

1. REINFORCING STEEL SHALL BE IN ACCORDANCE WITH ASTM A615 SPECIFICATIONS GRADE 60.

2. WELDED WIRE FABRIC REINFORCING SHALL BE IN ACCORDANCE WITH ASTM A185. FLAT SHEETS ONLY.

3. DEFORMED WIRE FABRIC REINFORCING SHALL BE IN ACCORDANCE WITH ASTM A497.

4. REINFORCING SHALL BE DETAILED ACCORDING TO THE ACI DETAILING MANUAL.

5. FIELD WELDING, CUTTING OR BENDING OF REINFORCEMENT SHALL NOT BE ALLOWED UNLESS NOTED OTHERWISE OR UNLESS PRIOR APPROVAL IS OBTAINED FROM THE ENGINEER.

6. ANCHOR RODS AND CABLE LOOPS SHALL BE ACCURATELY LOCATED, SET WITH TEMPLATES, AND SHALL BE PROTECTED FROM CONSTRUCTION ACTIVITY UNTIL THE STRUCTURE ABOVE IS IN PLACE. INSERTING ANCHOR RODS INTO PARTIALLY HARDENED CONCRETE IS PROHIBITED.

7. LAP BARS ONLY AT LOCATIONS SHOWN ON THE DRAWINGS, OR AS APPROVED BY THE ENGINEER.

8. COVER ON REINFORCING SHALL BE AS FOLLOWS, UNLESS OTHERWISE NOTED ON DRAWINGS. REINFORCEMENT SHALL BE ASSUMED EXPOSED TO WEATHER IN ALL CASES.

3" - PLACED DIRECTLY AGAINST EARTH.
2" - PLACED AGAINST FORMWORK.

E. GALVANIZED ELEMENTS:

1. GALVANIZED CONNECTION ELEMENTS (BOLTS, CONNECTION BRACKETS, ETC.) SHALL MEET ASTM A153 REQUIREMENTS.

E. FENCE FABRIC:

1. WELDED WIRE MESH FENCE FABRIC SHALL MEET THE REQUIREMENTS OF ASTM F2453.
WELDED WIRE MESH FENCE FABRIC SHALL BE 4 GAUGE 3" X ¾" C/C GRID, WITH 2¾" X ½" CLEAR.

F. STRUCTURAL STEEL:

1. STRUCTURAL STEEL SHOP DRAWINGS, INCLUDING THE DESIGN AND DETAILING OF STRUCTURAL STEEL CONNECTIONS, SHALL BE DONE UNDER THE SUPERVISION OF A LICENSED PROFESSIONAL ENGINEER.

2. STRUCTURAL STEEL SHALL MEET THE AISC "SPECIFICATION FOR STRUCTURAL STEEL FOR BUILDINGS" DATED MARCH 9, 2005. FROM THE THIRTEENTH EDITION OF THE AISC MANUAL OF STEEL CONSTRUCTION.

3. STRUCTURAL STEEL TUBING (RECTANGULAR HSS) SHALL MEET ASTM A500 GRADE B (STRUCTURAL STEEL). W–SECTIONS SHALL MEET ASTM A992 GRADE 50 (STRUCTURAL STEEL). ANGLES, BARS, AND PLATES SHALL MEET ASTM A992 GRADE 50 OR ASTM A572 GRADE 50 (STRUCTURAL STEEL). SHEET STEEL SHALL MEET ASTM A570 (STEEL, SHEET, & STRIP).

4. WELDING–ALL WELDING SHALL BE IN ACCORDANCE WITH THE LATEST STRUCTURAL WELDING CODE AWS D1.1.

5. E70XX ELECTRODES SHALL BE USED FOR ALL WELDING.

6. NO COLUMN OR BEAM SPLICES, UNLESS CLEARLY INDICATED ON STRUCTURAL DRAWINGS, WILL BE ALLOWED WITHOUT WRITTEN APPROVAL OF STRUCTURAL ENGINEER.

US Army Corps of Engineers
Fort Worth District

Mark	Description	Date	Appr.

Baker
MICHAEL BAKER JR., INC.
2929 NORTH CENTRAL AVENUE
SUITE 830
PHOENIX, AZ 85012

Designed by: MKB		Date: 4-2-08	Rev.
Dwn by: MKB	Ckd by: JWB	Submitted by: Michael Baker Jr., Inc.	
Reviewed by: TQ		Plot date: 4/3/08	Baker Project No: 112319

PF225 STANDARD FENCE DETAILS

GENERAL NOTES

SHEET REFERENCE NUMBER:
N-1
SHEET 1 OF 1

I:\projects\usace\pf225\drawings\pf225\notes.dwg

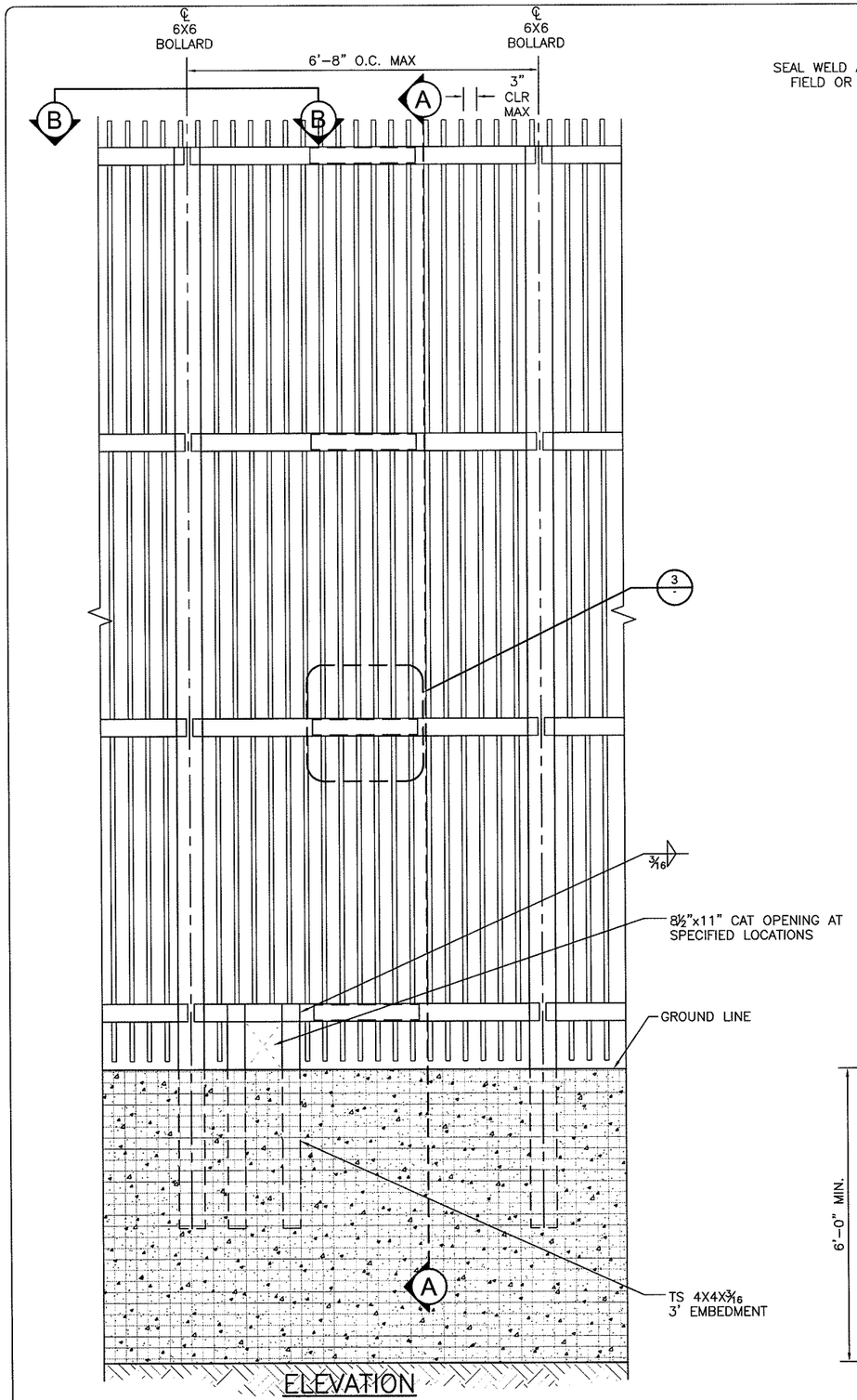

ELEVATION
(LOOKING SOUTH)

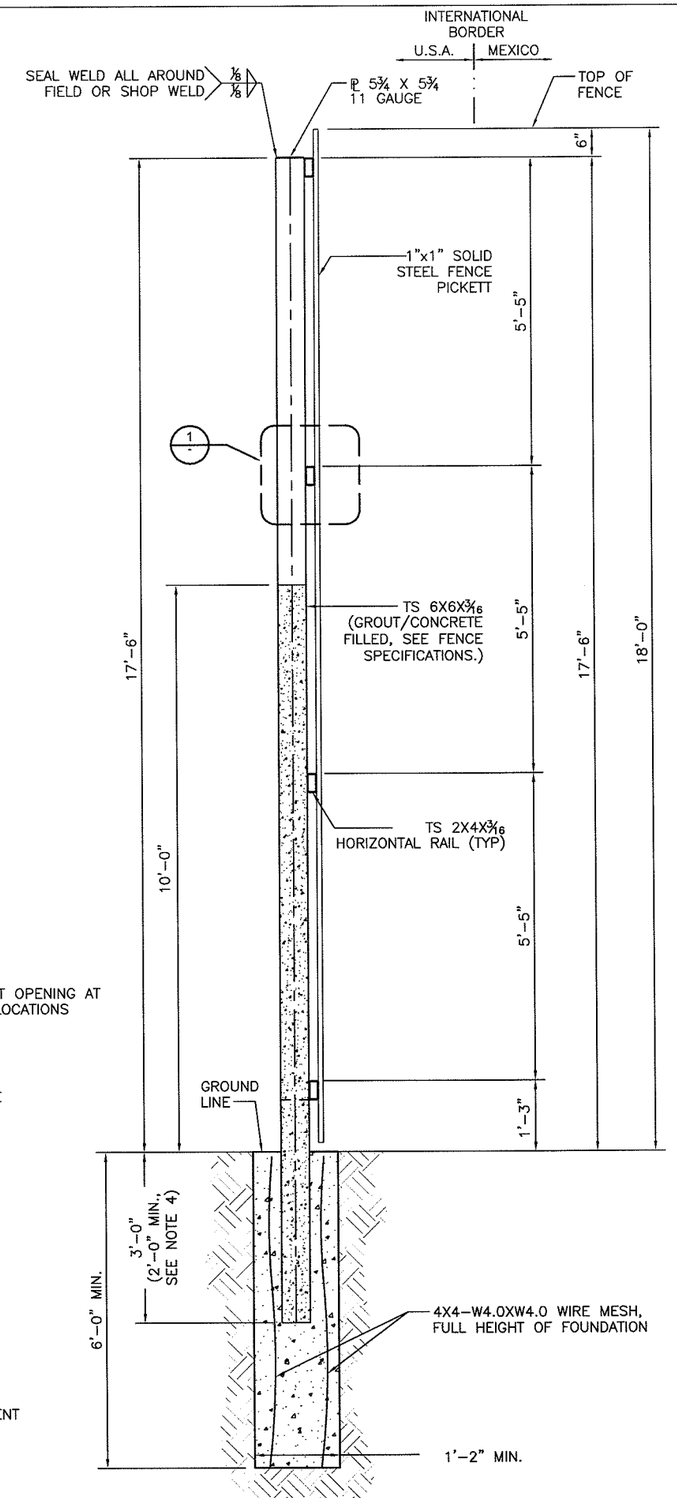

SECTION A-A

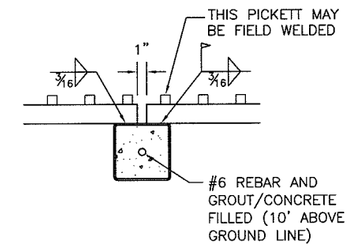

SECTION B-B

NOTE:
1. FOUNDATION DETAILS SHOWN REPRESENT MINIMUM DIMENSIONAL REQUIREMENTS AND MAY NEED INCREASED BASED ON FOUNDATION DESIGN.

2. SEE REQUEST FOR PROPOSAL DESIGN CRITERIA FOR ADDITIONAL INFORMATION.

3. THIS DRAWING PROVIDES GENERAL DESIGN AND CONSTRUCTION DETAILS. FINAL PLANS SHALL SHOW SPECIAL NOTES AND DETAILS WHERE NECESSARY FOR CONDITIONS OTHER THAN THOSE INDICATED HEREIN.

4. ADJACENT PANELS MAY BE STEPPED UP TO 1'-0" TO ACCOMMODATE VARYING TERRAIN. STEEPER TERRAIN MAY REQUIRE SPECIAL DESIGN CONSIDERATIONS.

US Army Corps of Engineers
Fort Worth District

Mark	Description	Date	Appr.

Baker
MICHAEL BAKER JR., INC
2929 NORTH CENTRAL AVENUE
SUITE 800
PHOENIX, AZ 85012

Designed by: KAS	Date: 4-2-08	Rev.	
Dwn by: JN/KAS	Ckd by: JWB	Submitted by: Michael Baker Jr., Inc.	
Reviewed by: TQ	Plot date: 4/3/08	Baker Project No: 112319	

PF225 STANDARD FENCE DETAILS

PERSONNEL TYPE 1

SHEET REFERENCE NUMBER:
P-1
SHEET 1 OF 2

I:\projects\usace\pf225\drawings\pf225p-1.dwg

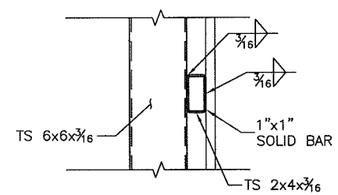

DETAIL 1
PICKETT & RAIL
ATTACHMENT

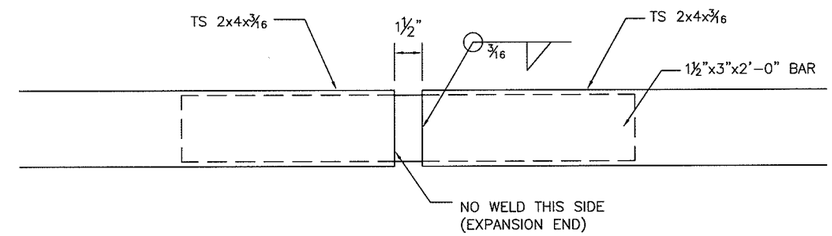

DETAIL 3
HORIZONTAL RAIL
EXPANSION JOINTS
(36' MAX SPACING)

US Army Corps
of Engineers
Fort Worth District

Mark	Description	Date	Appr.

Baker
MICHAEL BAKER JR., INC
2929 NORTH CENTRAL AVENUE
SUITE 800
PHOENIX, AZ 85012

Designed by: KAS		Date: 4-2-08	Rev.
Dwn by: JN/KAS	Ckd by: JWB	Submitted by: Michael Baker Jr., Inc.	
Reviewed by: TQ		Plot date: 4/3/08	Baker Project No: 112319

PF225 STANDARD FENCE DETAILS

PERSONNEL
TYPE 1

SHEET REFERENCE NUMBER:
P-1
SHEET 2 OF 2

I:\projects\usace\pf225\drawings\pf225p-1.dwg ---

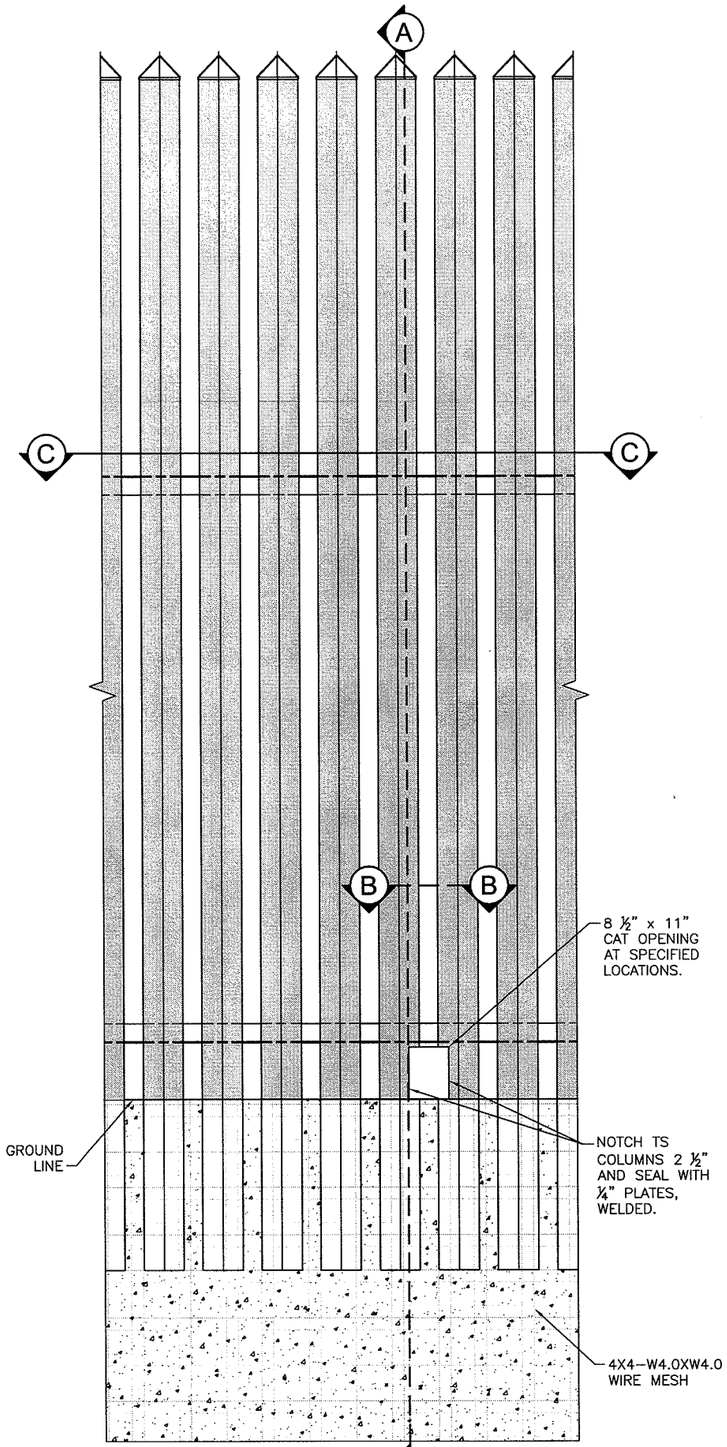

ELEVATION
(LOOKING SOUTH)

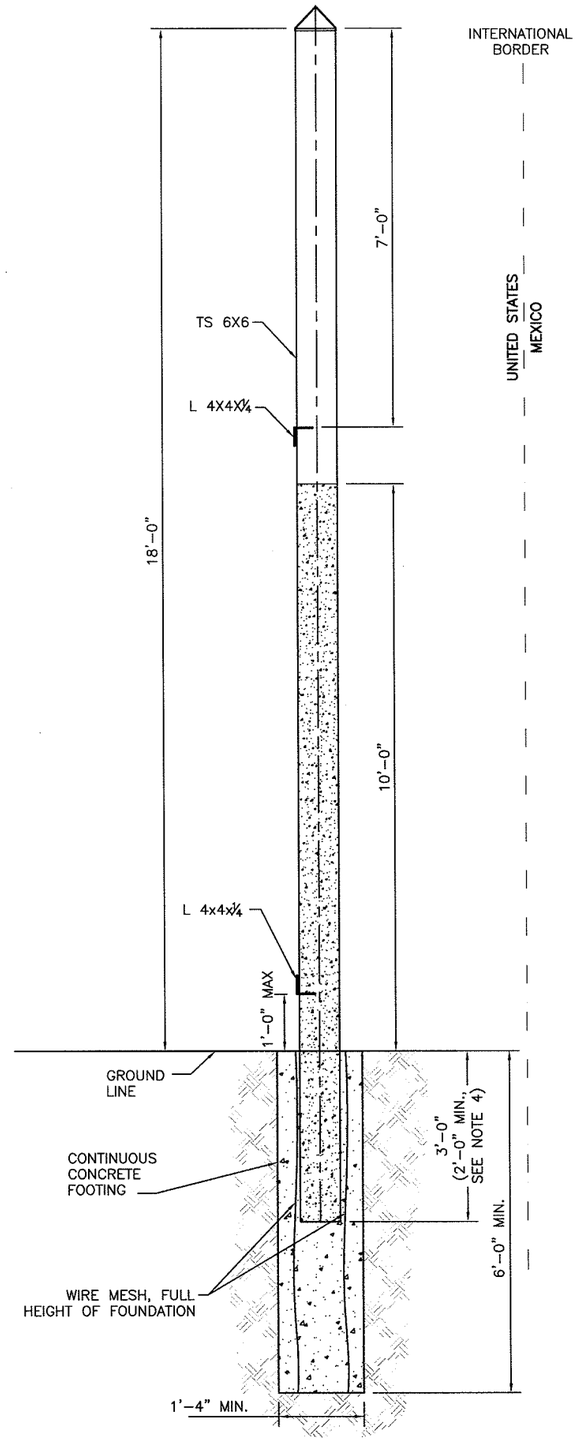

SECTION A-A

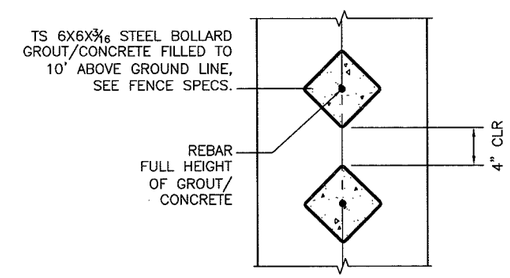

SECTION B-B

NOTE:

1. FOUNDATION DETAILS SHOWN REPRESENT MINIMUM DIMENSIONAL REQUIREMENTS AND MAY NEED TO BE INCREASED BASED ON FINAL DESIGN.

2. SEE REQUEST FOR PROPOSAL DESIGN CRITERIA FOR ADDITIONAL INFORMATION.

3. THIS DRAWING PROVIDES GENERAL DESIGN AND CONSTRUCTION DETAILS. FINAL PLANS SHALL SHOW SPECIAL NOTES AND DETAILS WHERE NECESSARY FOR CONDITIONS OTHER THAN THOSE INDICATED HEREIN.

4. ADJACENT PANELS MAY BE STEPPED UP TO 1'–0" TO ACCOMMODATE VARYING TERRAIN. STEEPER TERRAIN MAY REQUIRE SPECIAL DESIGN CONSIDERATIONS.

US Army Corps of Engineers
Fort Worth District

Mark	Description	Date	Appr.

Baker
MICHAEL BAKER JR., INC
2929 NORTH CENTRAL AVENUE
SUITE 800
PHOENIX, AZ 85012

Designed by: KAS	Date: 4-2-08	Rev.
Dwn by: MDC	Ckd by: JWB	Submitted by: Michael Baker Jr., Inc.
Reviewed by: TQ		Plot date: 4/3/08
		Baker Project No: 112319

PF225 STANDARD FENCE DETAILS

PERSONNEL
TYPE 2

SHEET REFERENCE NUMBER:
P-2
SHEET 1 OF 2

I:\projects\usace\pf225\drawings\pf225p-2.dwg

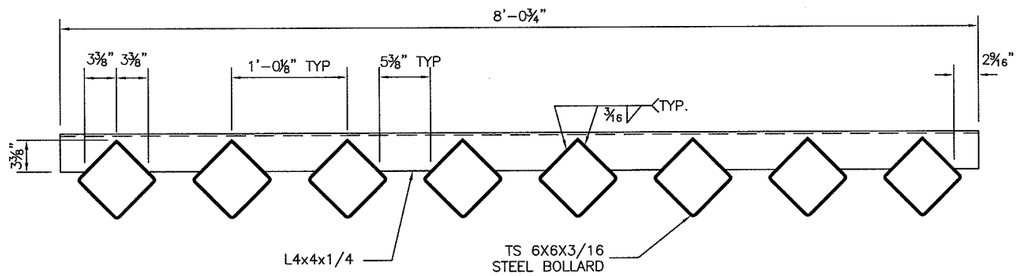

SECTION C-C

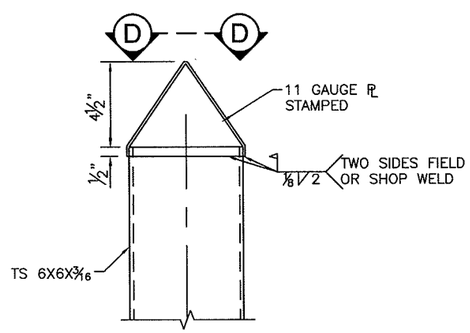

CAP DETAIL

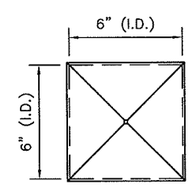

SECTION D-D

US Army Corps
of Engineers
Fort Worth District

Mark	Description	Date	Appr.

Baker
MICHAEL BAKER JR. INC.
2929 NORTH CENTRAL AVENUE
SUITE 800
PHOENIX, AZ 85012

Designed by: KAS		Date: 4-2-08	Rev:
Dwn by: MDC	Ckd by: JWB	Submitted by: Michael Baker Jr., Inc.	
Reviewed by: TQ		Plot date: 4/3/08	Baker Project No: 112319

PF225 STANDARD FENCE DETAILS

PERSONNEL
TYPE 2

SHEET REFERENCE NUMBER:
P-2
SHEET 2 OF 2

I:\projects\usace\pf225\drawings\pf225p-2.dwg

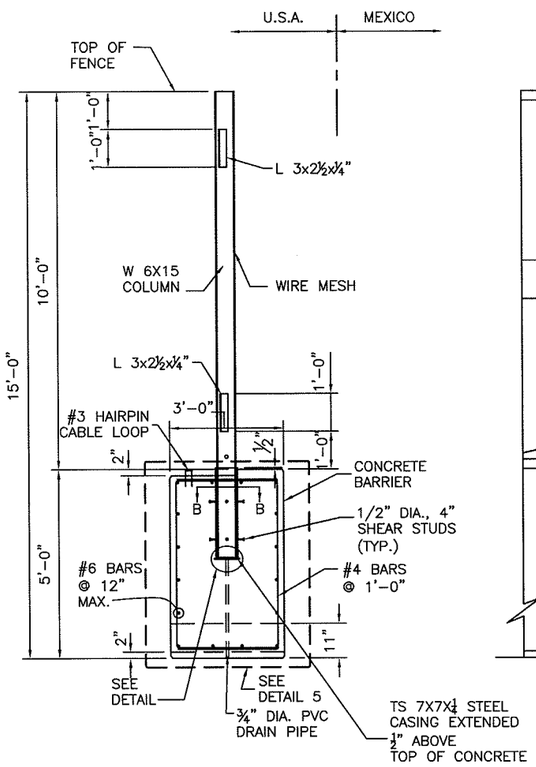

SECTION A-A

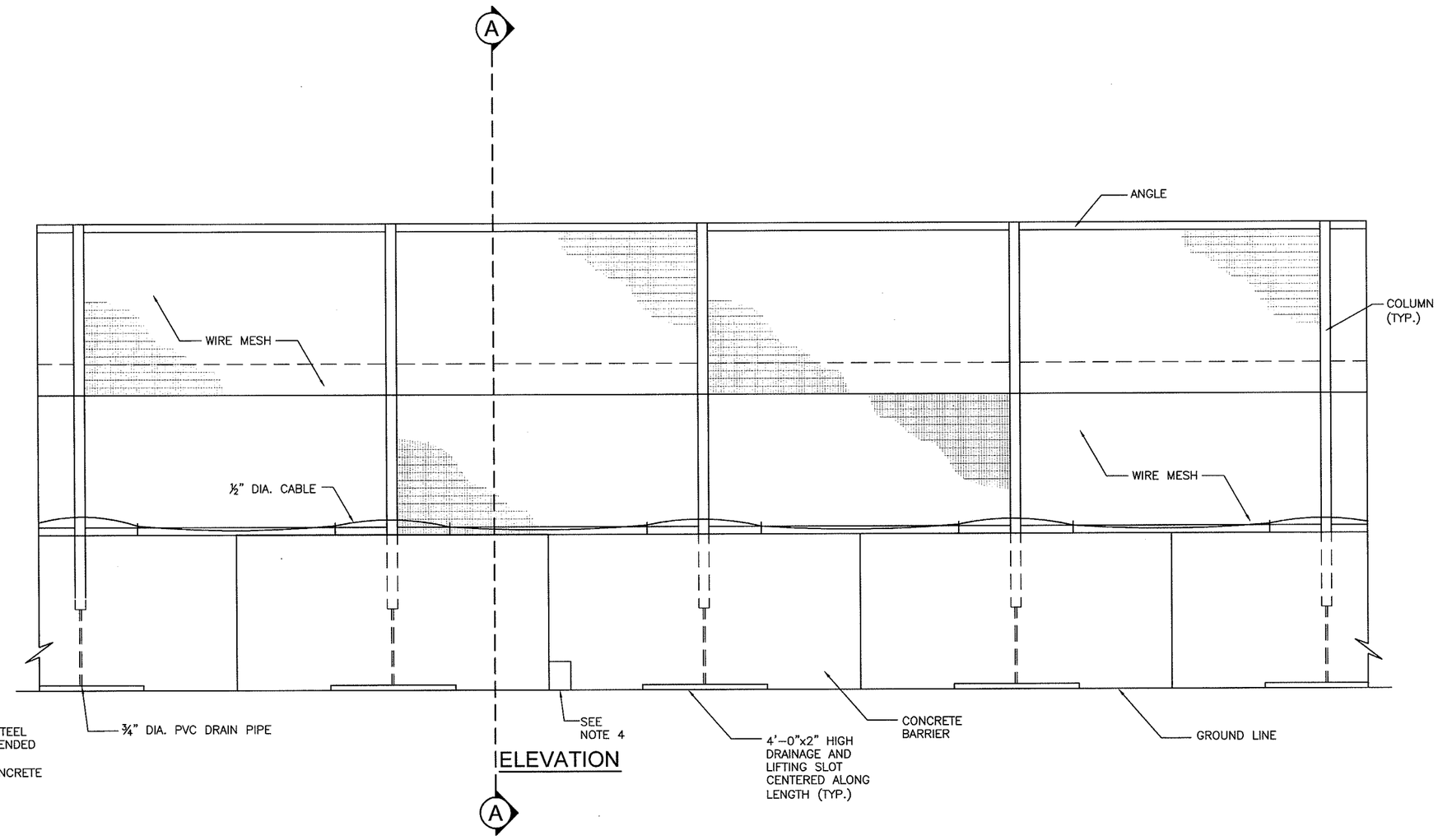

ELEVATION

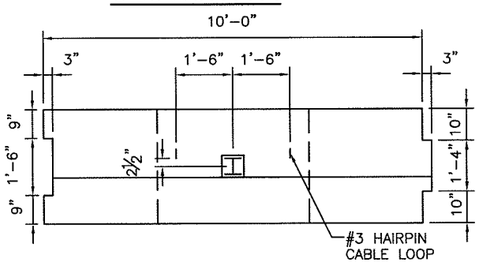

PLAN VIEW
10' CONCRETE SEGMENT

SECTION B-B

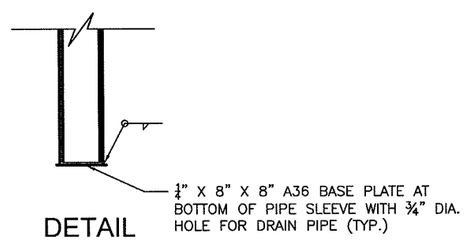

DETAIL

NOTE:

1. THIS FENCE CONSTRUCTION IS INTENDED TO BE DISMANTLED READILY. COORDINATE WITH BORDER CONTROL ON LOCATION AND NUMBER OF LOCK POINTS FOR ½" CABLE.
2. SEE GENERAL NOTES, SHEET N-1, FOR WELDED WIRE MESH SPECIFICATIONS
3. CAT OPENING TO BE 8½"X11". AMPHIBIAN/REPTILE OPENING TO BE 5" SQUARE.
4. THE FENCE, AS DESIGNED, PRODUCES A MAXIMUM SERVICE LOAD BEARING PRESSURE OF 1800 PSF. MODIFICATIONS TO THE CONCRETE BASE GEOMETRY MAY BE REQUIRED DEPENDING ON ALLOWABLE BEARING CAPACITIES OF ANY SITE, WHICH SHALL BE DETERMINED BY A GEOTECHNICAL ENGINEER.
5. SEE REQUEST FOR PROPOSAL DESIGN CRITERIA FOR ADDITIONAL INFORMATION.
6. THIS DRAWING PROVIDES GENERAL DESIGN AND CONSTRUCTION DETAILS. FINAL PLANS SHALL SHOW SPECIAL NOTES AND DETAILS WHERE NECESSARY FOR CONDITIONS OTHER THAN THOSE INDICATED HEREIN.

US Army Corps of Engineers
Fort Worth District

Baker
MICHAEL BAKER JR., INC.
2929 NORTH CENTRAL AVENUE
SUITE 600
PHOENIX, AZ 85012

Mark	Description	Date	Appr.

Designed by: KAS		Date: 4-2-08	Rev:
Dwn by: JN/KAS	Ckd by: JWB	Submitted by: Michael Baker Jr., Inc.	
Reviewed by: TQ		Plot date: 4/3/08	Baker Project No: 112319

PF225 STANDARD FENCE DETAILS

PERSONNEL
TYPE 3A-15

SHEET REFERENCE NUMBER:
P-3A-15
SHEET 1 OF 2

I:\projects\usace\pf225\drawings\pf225p-3a-15.dwg

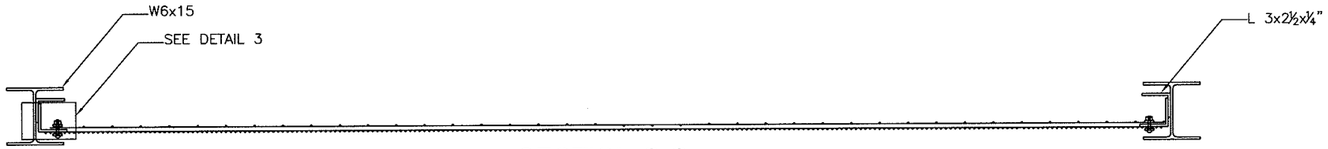

SECTION C-C

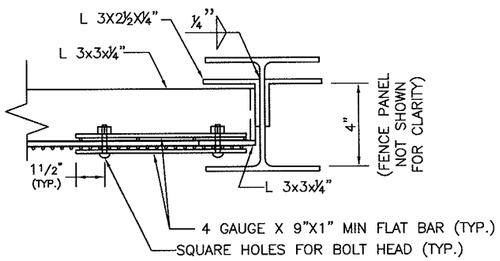

DETAIL 2
FENCE FABRIC ATTACHMENT

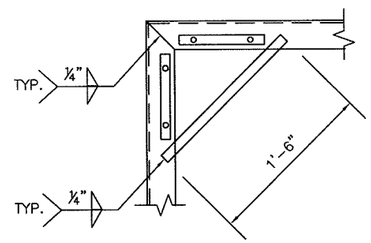

DETAIL 4

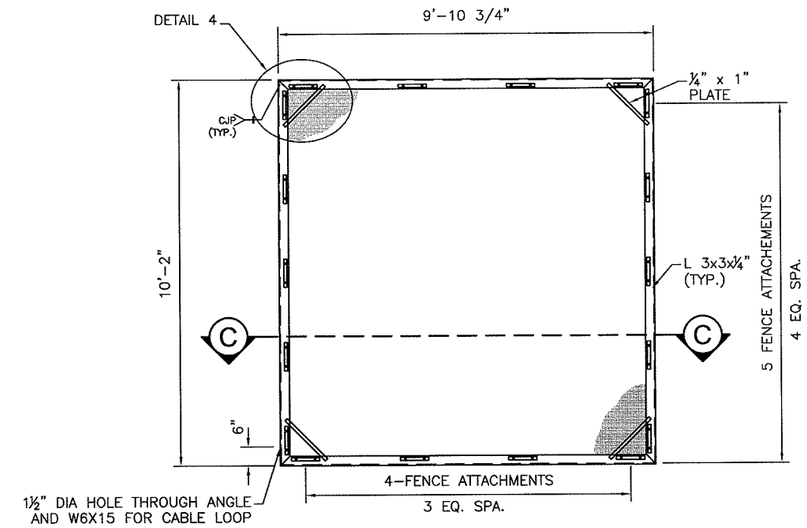

STANDARD FENCE PANEL

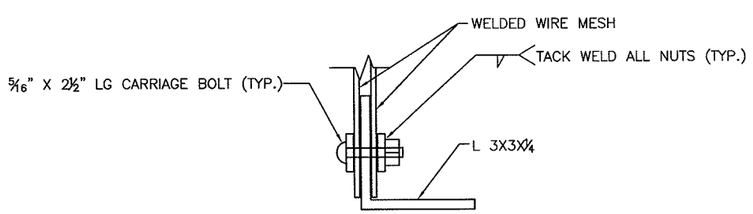

DETAIL 3

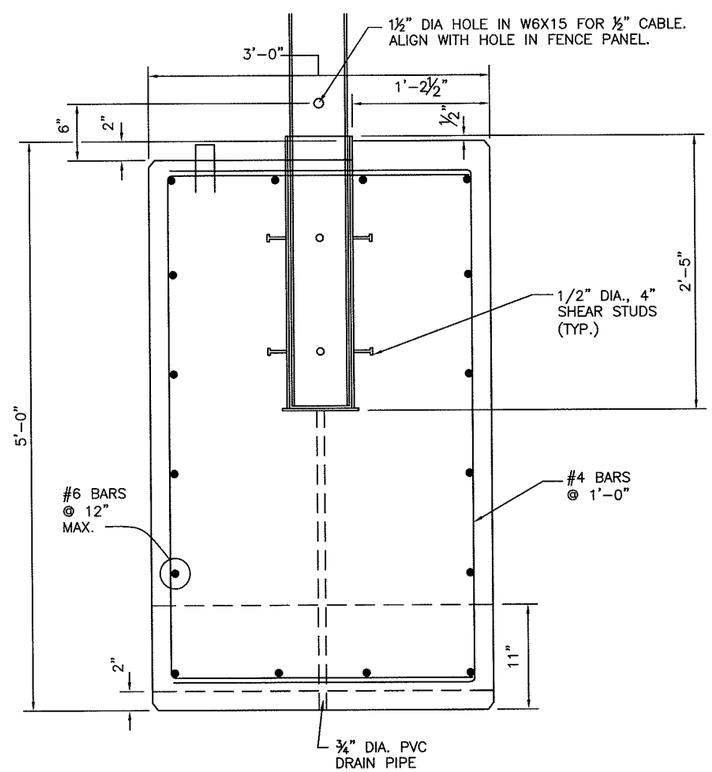

DETAIL 5

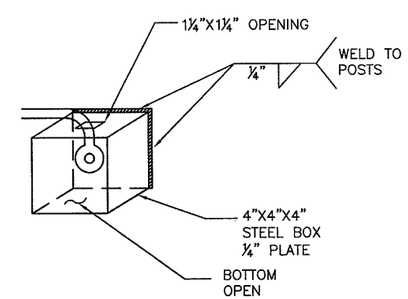

LOCK BOX DETAIL

US Army Corps of Engineers
Fort Worth District

Mark	Description	Date	Appr.

Baker
MICHAEL BAKER JR., INC.
2929 NORTH CENTRAL AVENUE
SUITE 800
PHOENIX, AZ 85012

Designed by: KAS		Date: 4-2-08	Rev:
Dwn by: KAS	Ckd by: JWB	Submitted by: Michael Baker Jr., Inc.	
Reviewed by: TQ		Plot date: 4/3/08	Baker Project No: 112319

PF225
STANDARD
FENCE
DETAILS

PERSONNEL
TYPE 3A-15

SHEET REFERENCE NUMBER:
P-3A-15
SHEET 2 OF 2

I:\projects\usace\pf225\drawings\pf225fy-3a-15.dwg

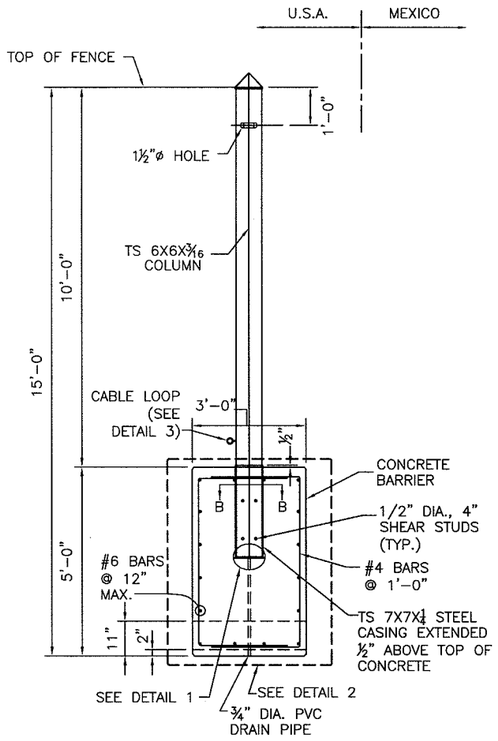

SECTION A-A

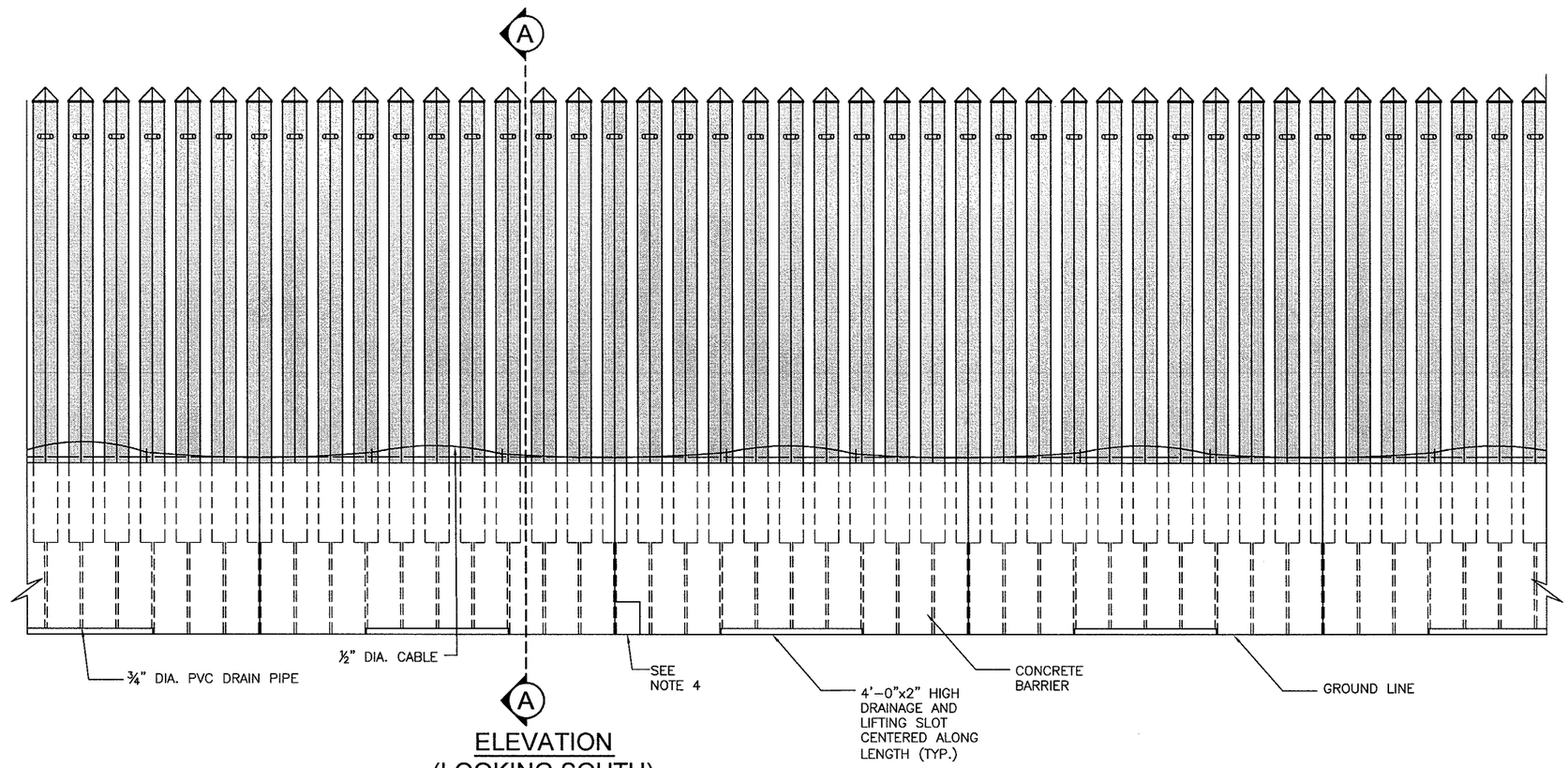

ELEVATION
(LOOKING SOUTH)

SECTION B-B

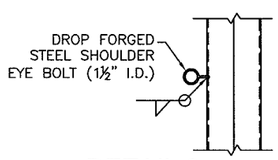

DETAIL 3

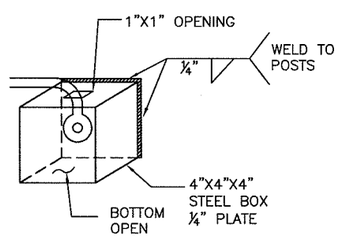

LOCK BOX DETAIL

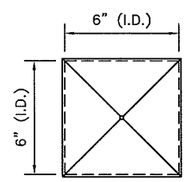

SECTION C-C

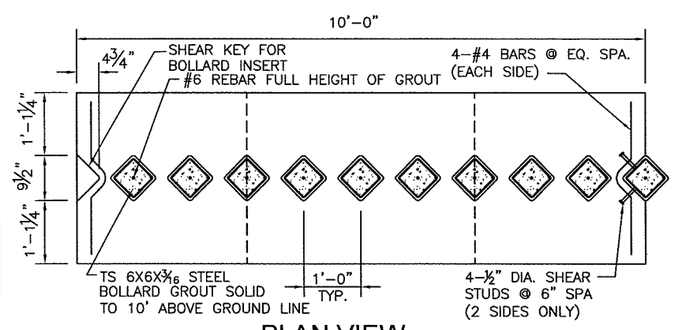

PLAN VIEW
10' CONCRETE SEGMENT

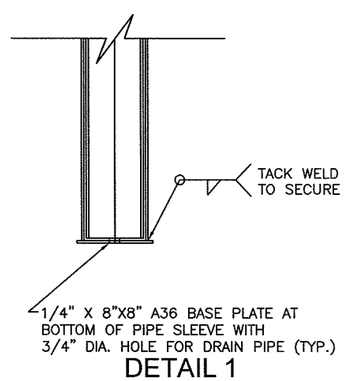

DETAIL 1

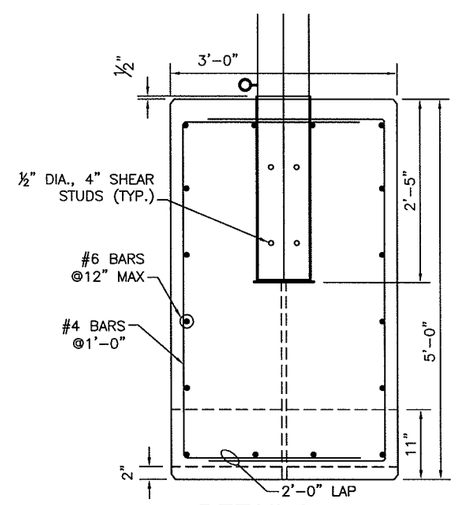

DETAIL 2

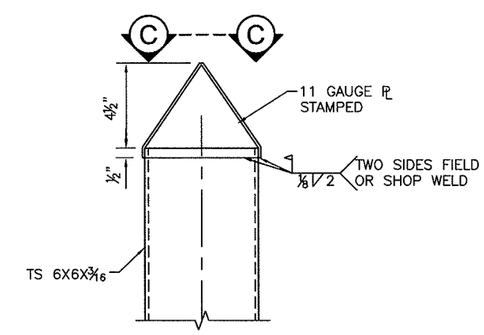

CAP DETAIL

NOTE:

1. THIS FENCE CONSTRUCTION IS INTENDED TO BE DISMANTLED READILY. COORDINATE WITH BORDER CONTROL ON LOCATION AND NUMBER OF LOCK POINTS FOR ½" CABLE.

2. CAT OPENING TO BE 8½"X11". AMPHIBIAN/REPTILE OPENING TO BE 5" SQUARE.

3. THE FENCE, AS DESIGNED, PRODUCES A MAXIMUM SERVICE LOAD BEARING PRESSURE OF 1800 PSF. MODIFICATIONS TO THE CONCRETE BASE GEOMETRY MAY BE REQUIRED DEPENDING ON ALLOWABLE BEARING CAPACITIES OF ANY SITE, WHICH SHALL BE DETERMINED BY A GEOTECHNICAL ENGINEER.

4. SEE REQUEST FOR PROPOSAL DESIGN CRITERIA FOR ADDITIONAL INFORMATION.

5. THIS DRAWING PROVIDES GENERAL DESIGN AND CONSTRUCTION DETAILS. FINAL PLANS SHALL SHOW SPECIAL NOTES AND DETAILS WHERE NECESSARY FOR CONDITIONS OTHER THAN THOSE INDICATED HEREIN.

US Army Corps of Engineers
Fort Worth District

Mark	Description	Date	Appr.

Baker
MICHAEL BAKER JR., INC.
2929 NORTH CENTRAL AVENUE
SUITE 800
PHOENIX, AZ 85012

Designed by: KAS	Date: 4-2-08	Rev.	
Dwn by: JN/KAS	Ckd by: JWB	Submitted by: Michael Baker Jr., Inc.	
Reviewed by: TQ		Plot date: 4/3/08	Baker Project No: 112319

PF225 STANDARD FENCE DETAILS

PERSONNEL
TYPE 3B-15

SHEET REFERENCE NUMBER:
P-3B-15
SHEET 1 OF 1

I:\projects\usace\pf225\drawings\p225p-3b-15.dwg

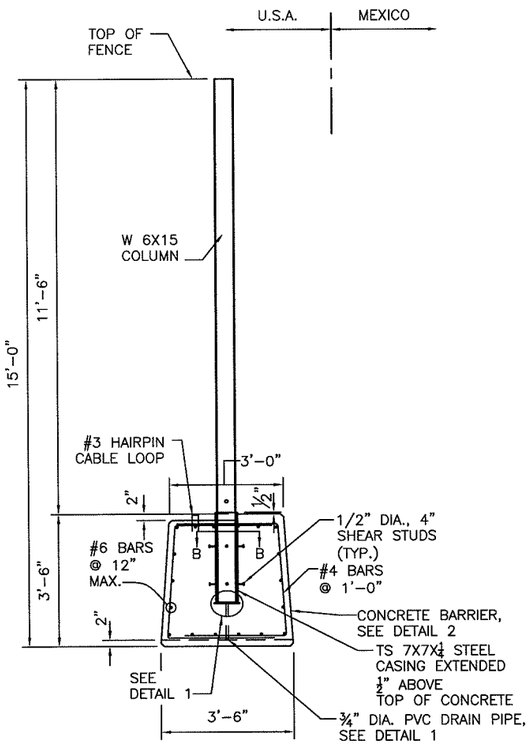

SECTION A-A

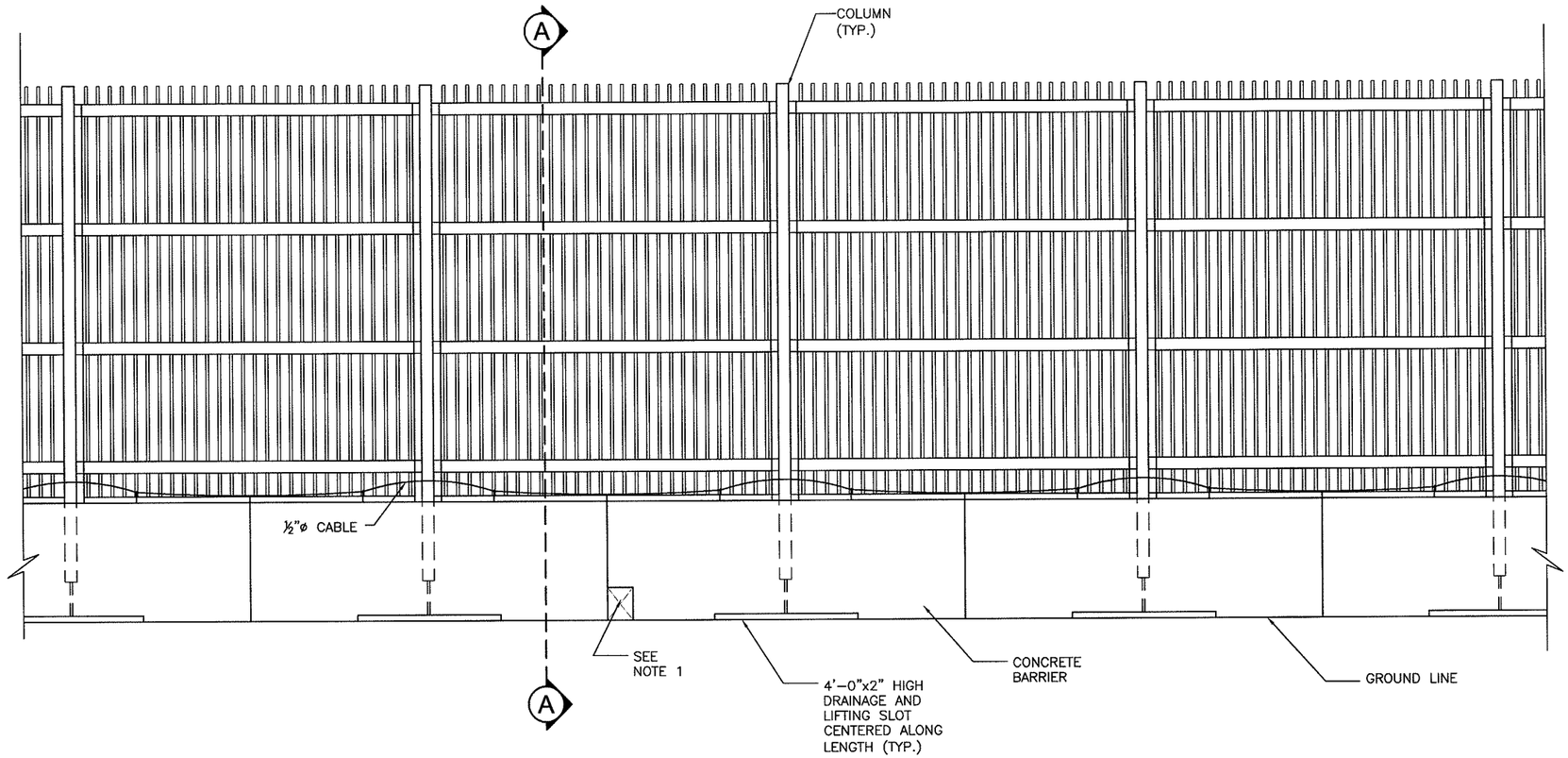

ELEVATION
(LOOKING SOUTH)

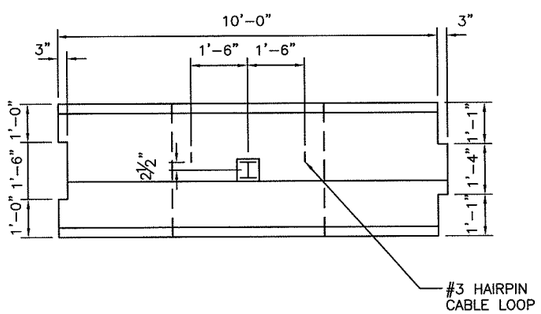

PLAN VIEW
10' CONCRETE SEGMENT

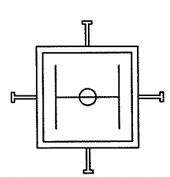

SECTION B-B

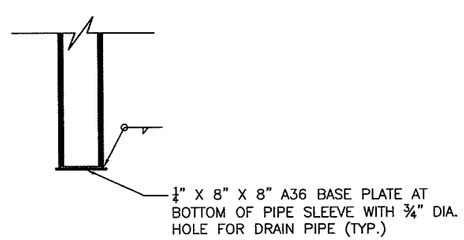

DETAIL 1

NOTE:

1. THIS FENCE CONSTRUCTION IS INTENDED TO BE DISMANTLED READILY. COORDINATE WITH BORDER CONTROL ON LOCATION AND NUMBER OF LOCK POINTS FOR 1/2" CABLE.

2. CAT OPENING TO BE 8 1/2"X11". AMPHIBIAN/REPTILE OPENING TO BE 5" SQUARE.

3. THE FENCE, AS DESIGNED, PRODUCES A MAXIMUM SERVICE LOAD BEARING PRESSURE OF 1100 PSF. MODIFICATIONS TO THE CONCRETE BASE GEOMETRY MAY BE REQUIRED DEPENDING ON ALLOWABLE BEARING CAPACITIES OF ANY SITE, WHICH SHALL BE DETERMINED BY A GEOTECHNICAL ENGINEER.

4. SEE REQUEST FOR PROPOSAL DESIGN CRITERIA FOR ADDITIONAL INFORMATION.

5. THIS DRAWING PROVIDES GENERAL DESIGN AND CONSTRUCTION DETAILS. FINAL PLANS SHALL SHOW SPECIAL NOTES AND DETAILS WHERE NECESSARY FOR CONDITIONS OTHER THAN THOSE INDICATED HEREIN.

US Army Corps of Engineers
Fort Worth District

Mark	Description	Date	Appr.

Baker
MICHAEL BAKER JR., INC.
2929 NORTH CENTRAL AVENUE
SUITE 800
PHOENIX, AZ 85012

Designed by: KAS		Date: 4-2-08	Rev.
Dwn by: KAS/KNB	Ckd by: JWB	Submitted by: Michael Baker Jr., Inc.	
Reviewed by: TQ		Plot date: 4/3/08	Baker Project No: 112319

PF225 STANDARD FENCE DETAILS

PERSONNEL
TYPE 3C-15

SHEET REFERENCE NUMBER:
P-3C-15
SHEET 1 OF 2

I:\projects\usace\pf225\drawings\pf225\p-3c-15.dwg

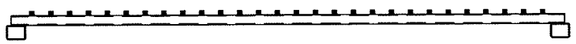

STANDARD FENCE PANEL PLAN

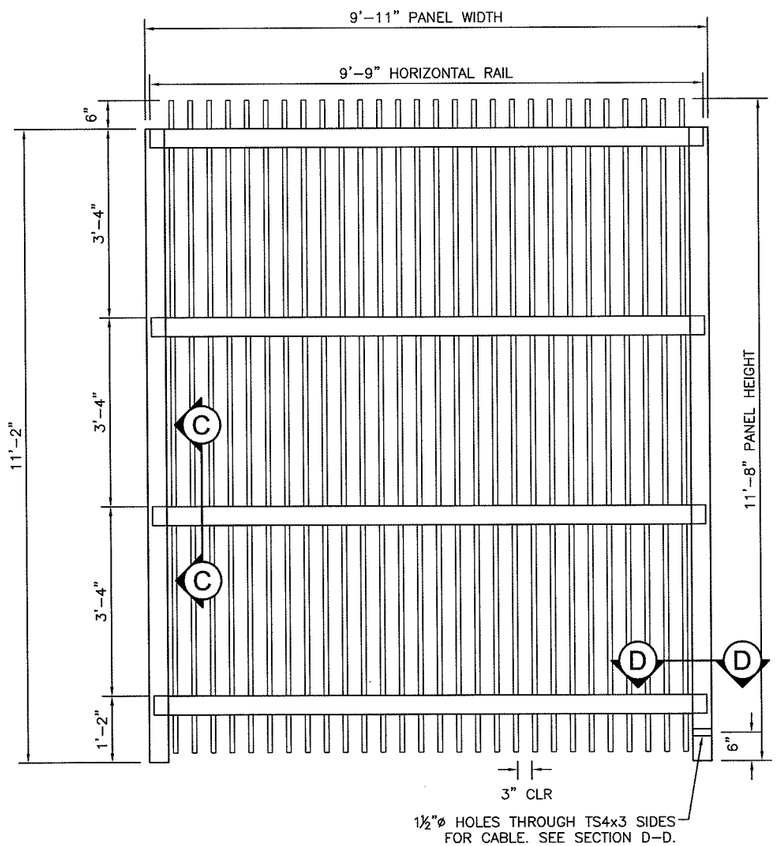

STANDARD FENCE PANEL ELEVATION

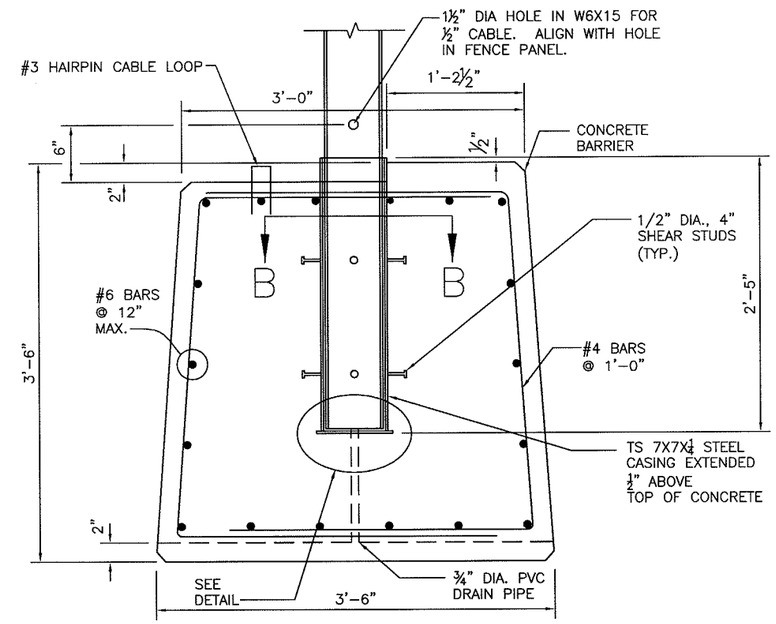

DETAIL 2

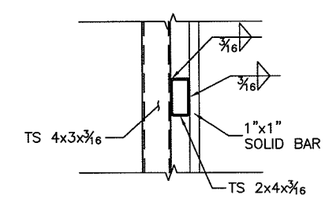

SECTION C-C

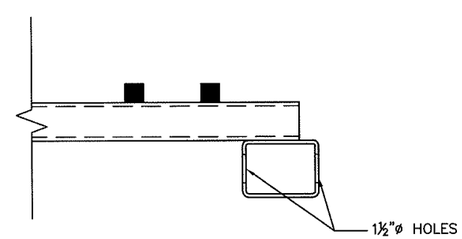

SECTION D-D

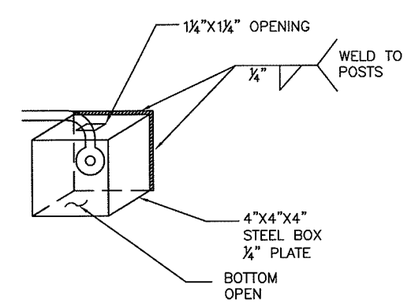

LOCK BOX DETAIL

US Army Corps of Engineers
Fort Worth District

Mark	Description	Date	Appr.

Baker
MICHAEL BAKER JR., INC
2500 NORTH CENTRAL AVENUE
SUITE 600
PHOENIX, AZ 85012

Designed by: KAS	Date: 4-2-08	Rev.	
Dwn by: KAS	Ckd by: JWB	Submitted by: Michael Baker Jr., Inc.	
Reviewed by: TQ		Plot date: 4/3/08	Baker Project No: 112319

PF225 STANDARD FENCE DETAILS

PERSONNEL TYPE 3C-15

SHEET REFERENCE NUMBER:
P-3C-15
SHEET 2 OF 2

I:\projects\usace\pf225\drawings\pf225p-3c-15.dwg

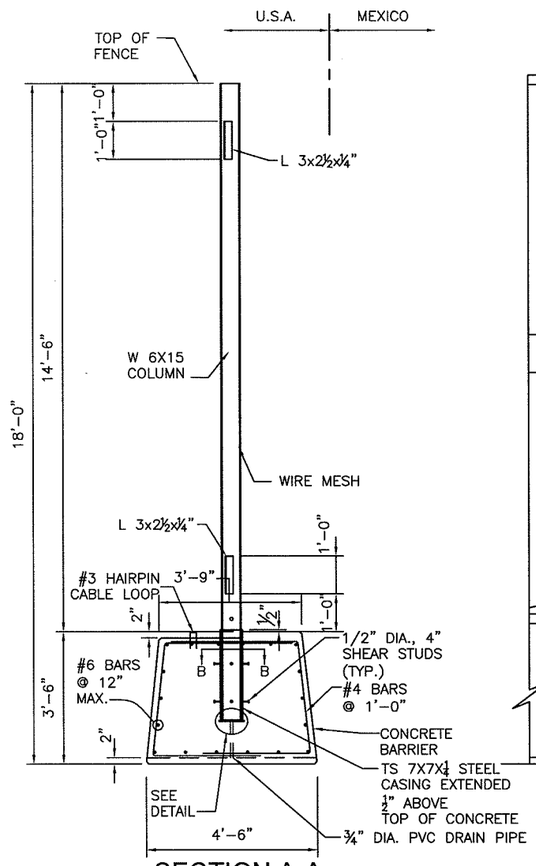

SECTION A-A

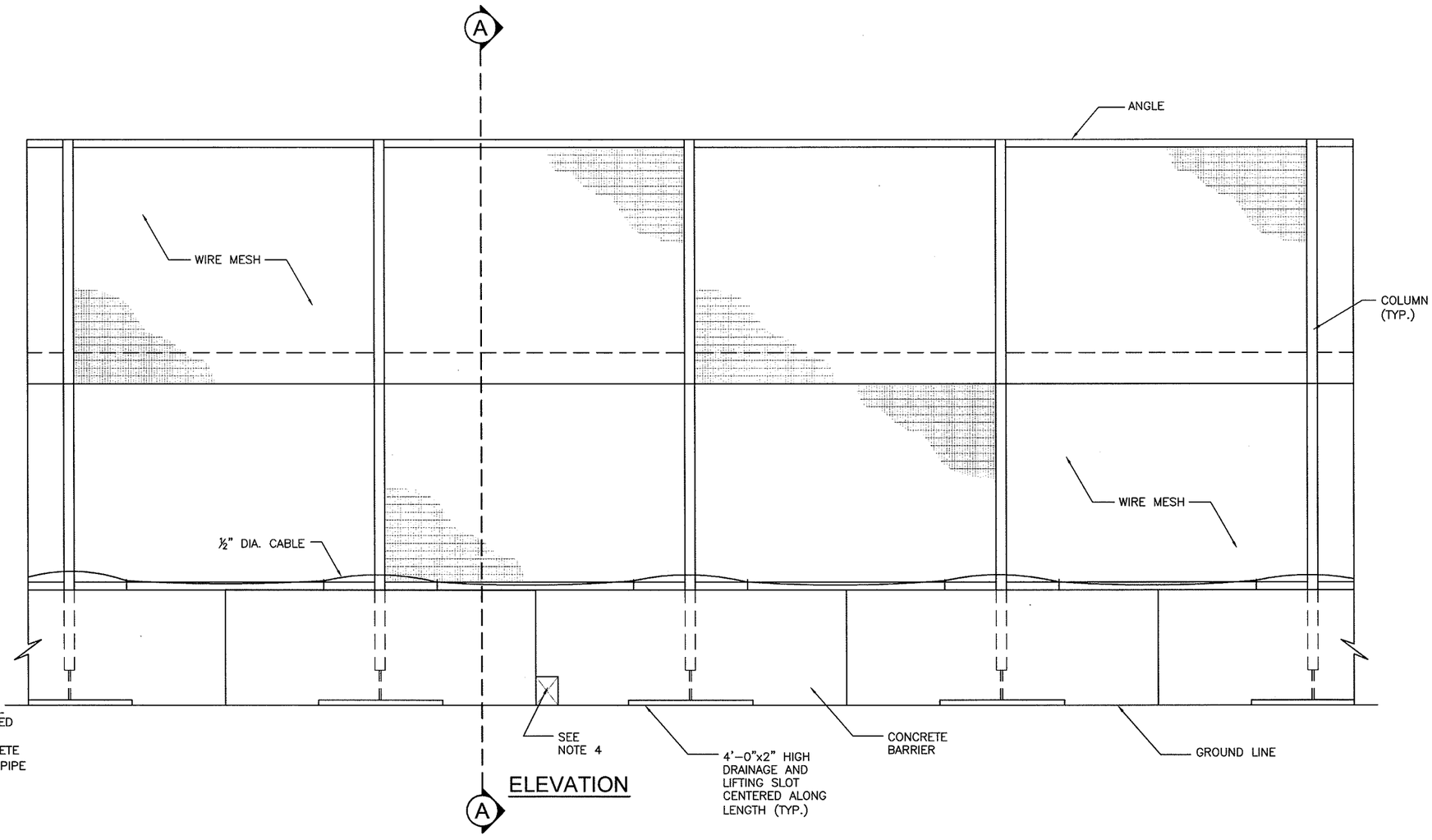

ELEVATION

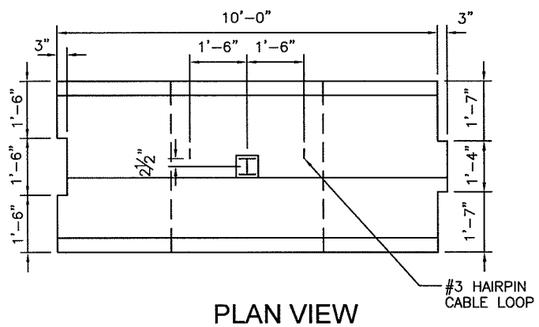

PLAN VIEW
10' CONCRETE SEGMENT

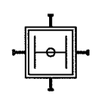

SECTION B-B

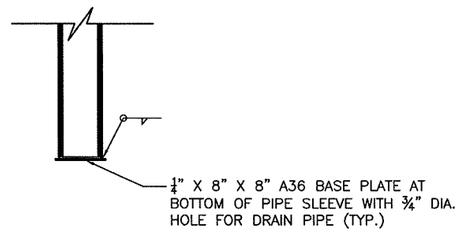

DETAIL

NOTE:
1. THIS FENCE CONSTRUCTION IS INTENDED TO BE DISMANTLED READILY. COORDINATE WITH BORDER CONTROL ON LOCATION AND NUMBER OF LOCK POINTS FOR ½" CABLE.

2. SEE GENERAL NOTES, SHEET N-1, FOR WELDED WIRE MESH SPECIFICATIONS.

3. CAT OPENING TO BE 8½"X11". AMPHIBIAN/REPTILE OPENING TO BE 5" SQUARE.

4. THE FENCE, AS DESIGNED, PRODUCES A MAXIMUM SERVICE LOAD BEARING PRESSURE OF 1200 PSF. MODIFICATIONS TO THE CONCRETE BASE GEOMETRY MAY BE REQUIRED DEPENDING ON ALLOWABLE BEARING CAPACITIES OF ANY SITE, WHICH SHALL BE DETERMINED BY A GEOTECHNICAL ENGINEER.

5. SEE REQUEST FOR PROPOSAL DESIGN CRITERIA FOR ADDITIONAL INFORMATION.

6. THIS DRAWING PROVIDES GENERAL DESIGN AND CONSTRUCTION DETAILS. FINAL PLANS SHALL SHOW SPECIAL NOTES AND DETAILS WHERE NECESSARY FOR CONDITIONS OTHER THAN THOSE INDICATED HEREIN.

US Army Corps of Engineers
Fort Worth District

Mark	Description	Date	Appr.

Baker
MICHAEL BAKER JR., INC
2929 NORTH CENTRAL AVENUE
SUITE 800
PHOENIX, AZ 85012

Designed by: KAS	Date: 4-2-08	Rev.	
Dwn by: KAS/KNB	Ckd by: JWB	Submitted by: Michael Baker Jr., Inc.	
Reviewed by: TQ		Plot date: 4/3/08	Baker Project No: 112319

PF225 STANDARD FENCE DETAILS

PERSONNEL TYPE 3A-18

SHEET REFERENCE NUMBER:
P-3A-18
SHEET 1 OF 2

I:\projects\usace\pf225\drawings\pf225\p-3a-18.dwg

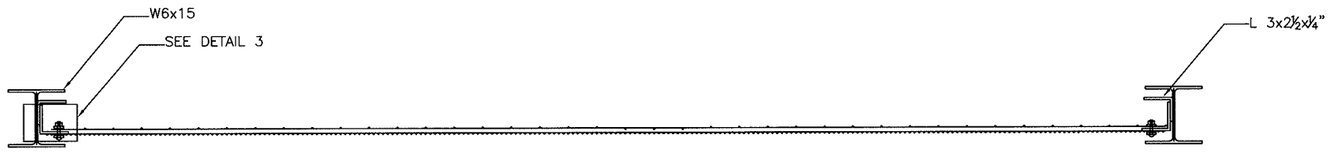

SECTION B-B

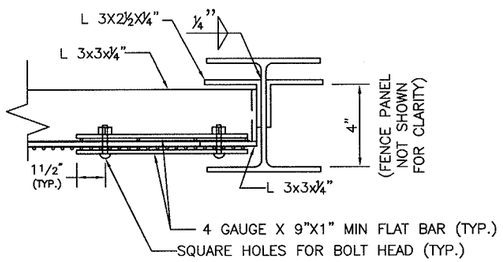

DETAIL 2
FENCE FABRIC ATTACHMENT

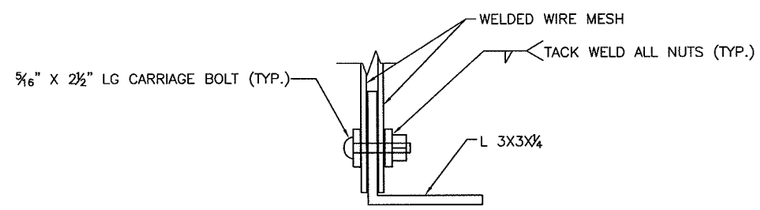

DETAIL 3

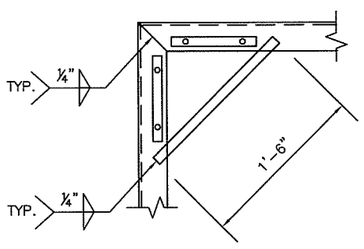

DETAIL 4

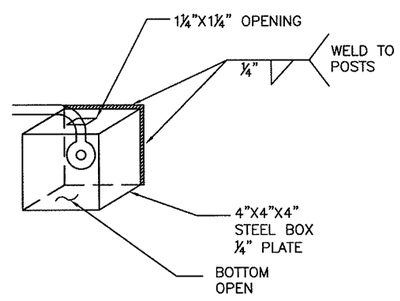

LOCK BOX DETAIL

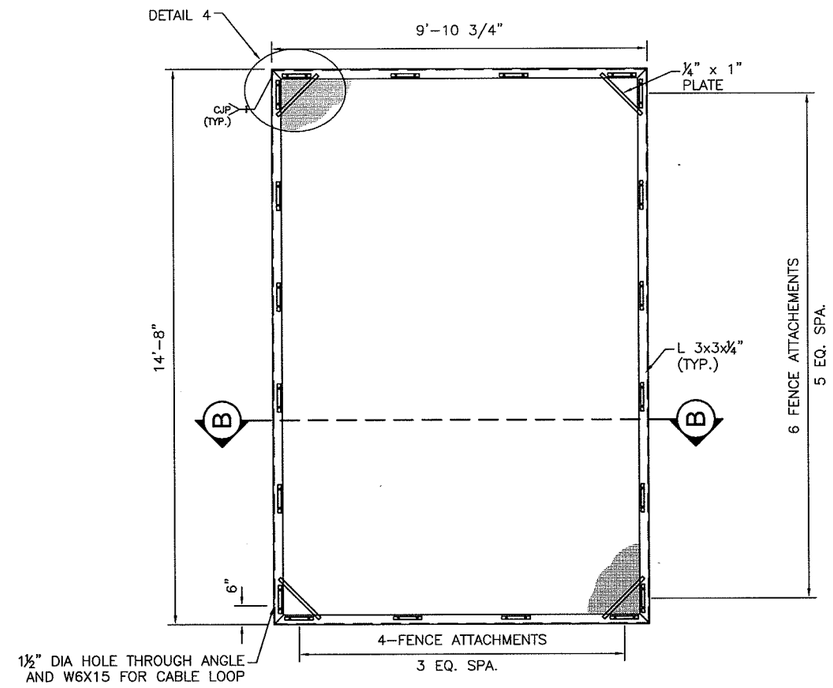

STANDARD FENCE PANEL

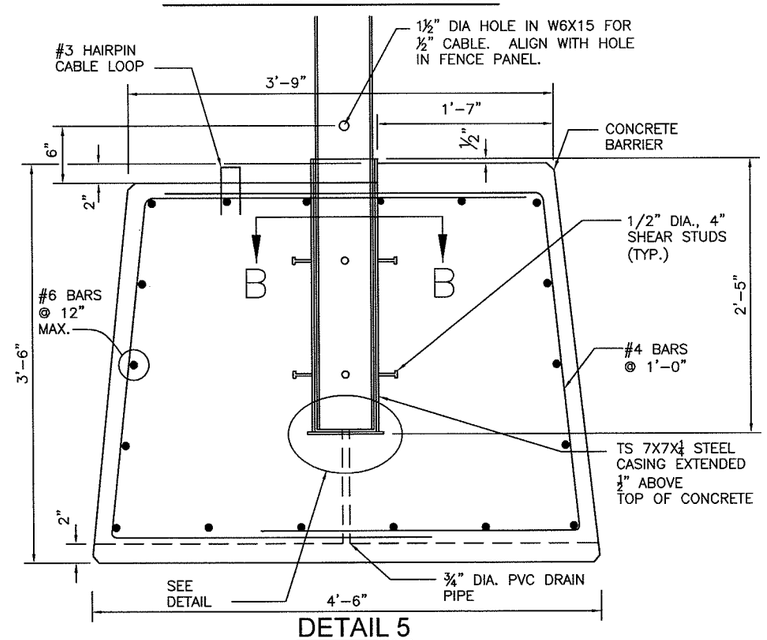

DETAIL 5

US Army Corps of Engineers
Fort Worth District

Mark	Description	Date	Appr.

Baker
MICHAEL BAKER JR., INC.
2929 NORTH CENTRAL AVENUE
SUITE 800
PHOENIX, AZ 85012

Designed by: KAS	Date: 4-2-08		Rev.
Dwn by: KAS	Ckd by: JWB	Submitted by: Michael Baker Jr., Inc.	
Reviewed by: TQ		Plot date: 4/3/08	Baker Project No: 112319

PF225 STANDARD FENCE DETAILS

PERSONNEL TYPE 3A-18

SHEET REFERENCE NUMBER:
P-3A-18
SHEET 2 OF 2

I:\projects\usace\pf225\drawings\pf225\p-3a-18.dwg

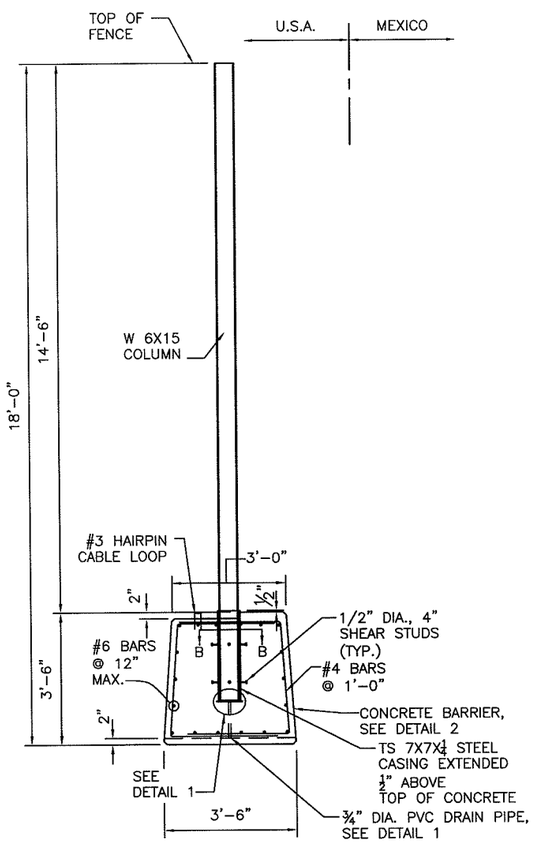

SECTION A-A

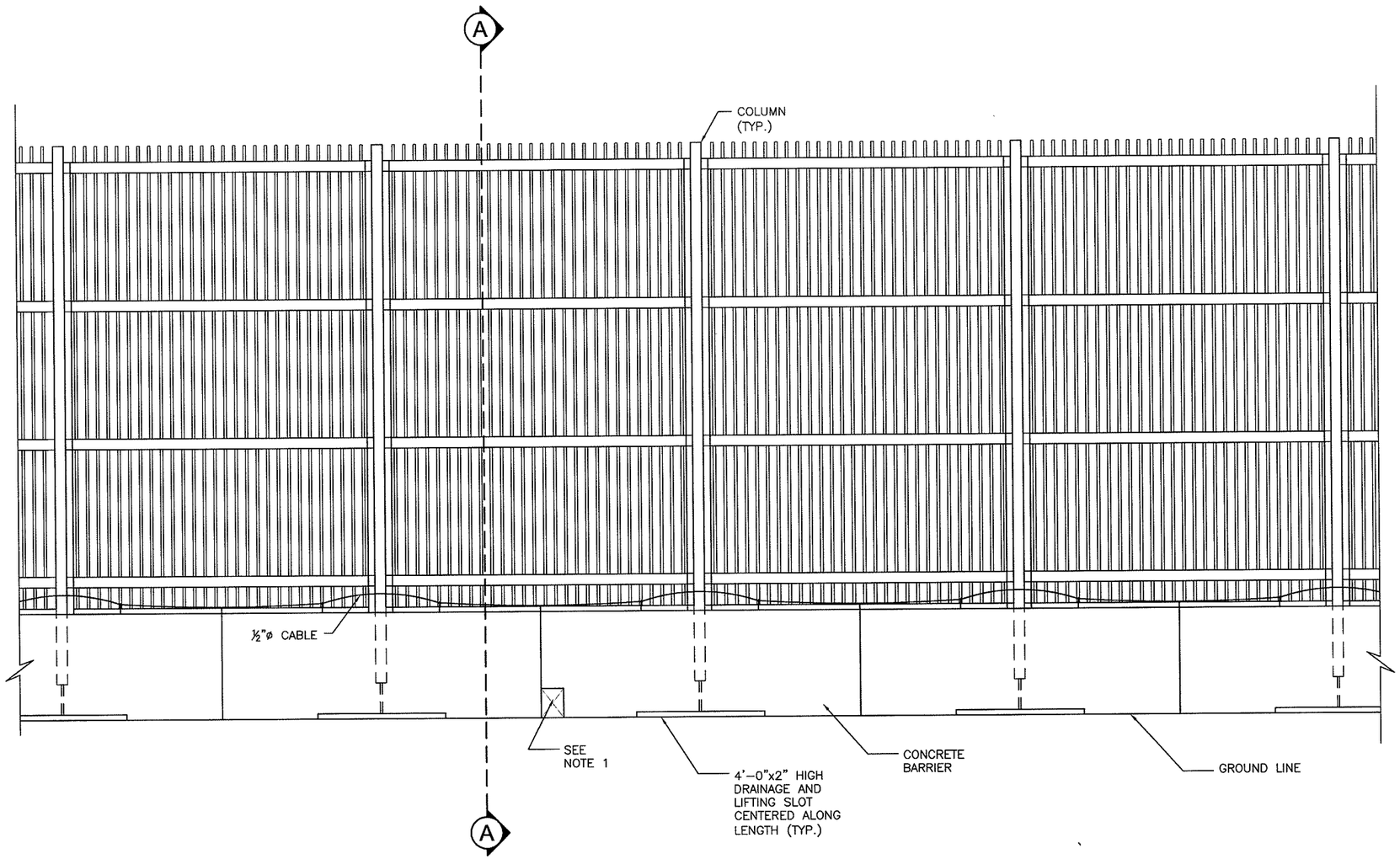

ELEVATION
(LOOKING SOUTH)

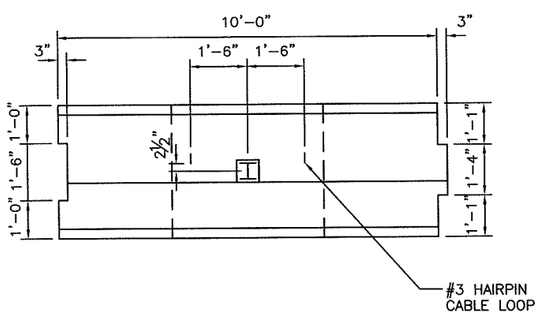

PLAN VIEW
10' CONCRETE SEGMENT

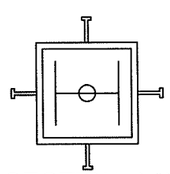

SECTION B-B

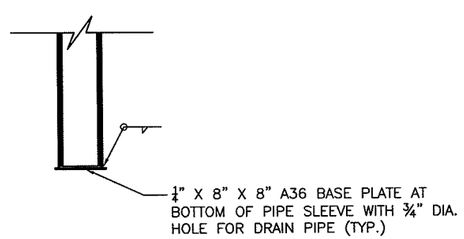

DETAIL 1

NOTE:
1. THIS FENCE CONSTRUCTION IS INTENDED TO BE DISMANTLED READILY. COORDINATE WITH BORDER CONTROL ON LOCATION AND NUMBER OF LOCK POINTS FOR ½" CABLE.

2. CAT OPENING TO BE 8½"X11". AMPHIBIAN/REPTILE OPENING TO BE 5" SQUARE.

3. THE FENCE, AS DESIGNED, PRODUCES A MAXIMUM SERVICE LOAD BEARING PRESSURE OF 1100 PSF. MODIFICATIONS TO THE CONCRETE BASE GEOMETRY MAY BE REQUIRED DEPENDING ON ALLOWABLE BEARING CAPACITIES OF ANY SITE, WHICH SHALL BE DETERMINED BY A GEOTECHNICAL ENGINEER.

4. SEE REQUEST FOR PROPOSAL DESIGN CRITERIA FOR ADDITIONAL INFORMATION.

5. THIS DRAWING PROVIDES GENERAL DESIGN AND CONSTRUCTION DETAILS. FINAL PLANS SHALL SHOW SPECIAL NOTES AND DETAILS WHERE NECESSARY FOR CONDITIONS OTHER THAN THOSE INDICATED HEREIN.

US Army Corps of Engineers
Fort Worth District

Mark	Description	Date	Appr.

Baker
MICHAEL BAKER JR., INC.
2929 NORTH CENTRAL AVENUE
SUITE 600
PHOENIX, AZ 85012

Designed by: KAS	Date: 4-2-08	Rev:
Dwn by: KAS/KNB	Ckd by: JWB	Submitted by: Michael Baker Jr., Inc.
Reviewed by: TQ		Plot date: 4/3/08
		Baker Project No: 112319

PF225 STANDARD FENCE DETAILS

PERSONNEL TYPE 3C-18

SHEET REFERENCE NUMBER:
P-3C-18
SHEET 1 OF 2

t:\projects\usace\pf225\drawings\pf225\p-3c-18.dwg ---

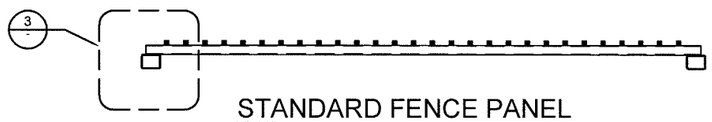

STANDARD FENCE PANEL PLAN

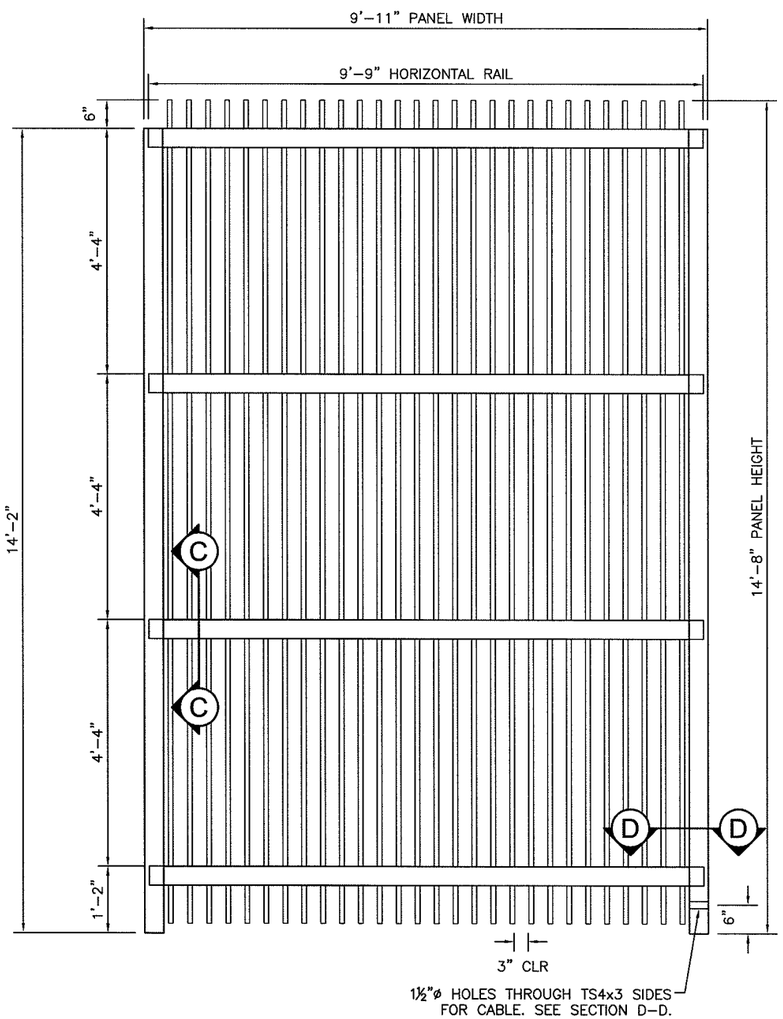

STANDARD FENCE PANEL ELEVATION

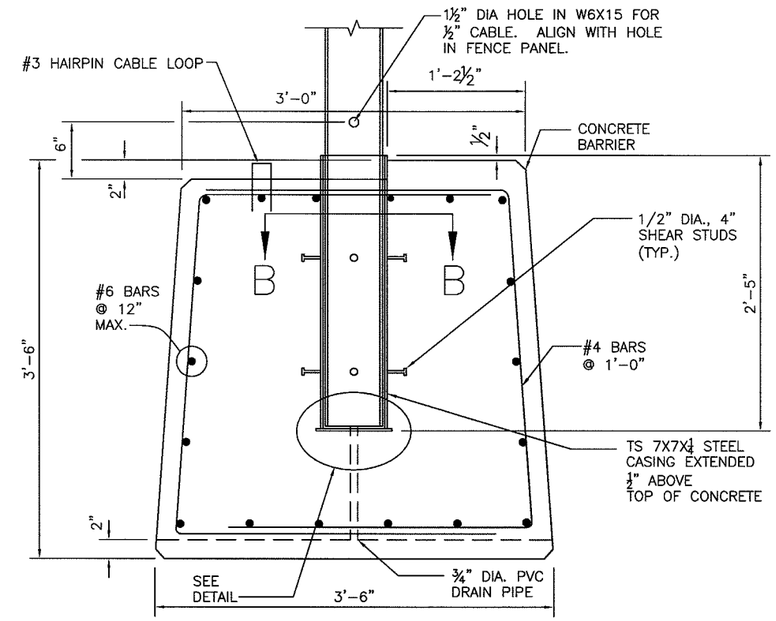

DETAIL 2

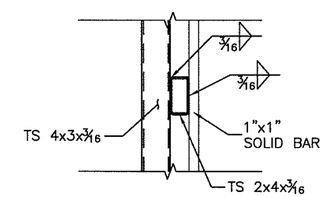

SECTION C-C

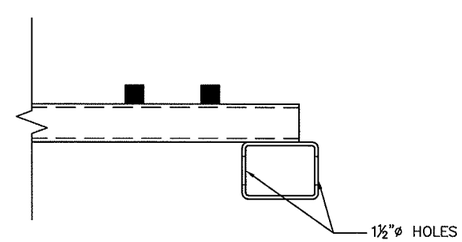

SECTION D-D

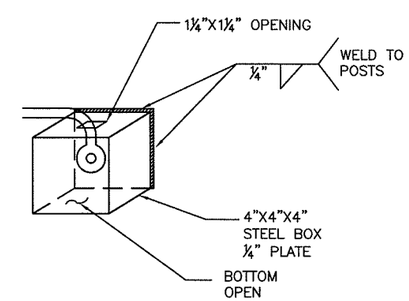

LOCK BOX DETAIL

US Army Corps of Engineers
Fort Worth District

Mark	Description	Date	Appr.

Baker
MICHAEL BAKER JR, INC
2929 NORTH CENTRAL AVENUE
SUITE 800
PHOENIX AZ 85012

Designed by: KAS
Dwn by: KAS
Ckd by: JWB
Reviewed by: TQ
Date: 4-2-08
Submitted by: Michael Baker Jr., Inc.
Plot date: 4/3/08
Rev.
Baker Project No: 112319

PF225 STANDARD FENCE DETAILS

PERSONNEL TYPE 3C-18

SHEET REFERENCE NUMBER:
P-3C-18
SHEET 2 OF 2

I:\projects\usace\pf225\drawings\pf225\p-3c-18.dwg ---

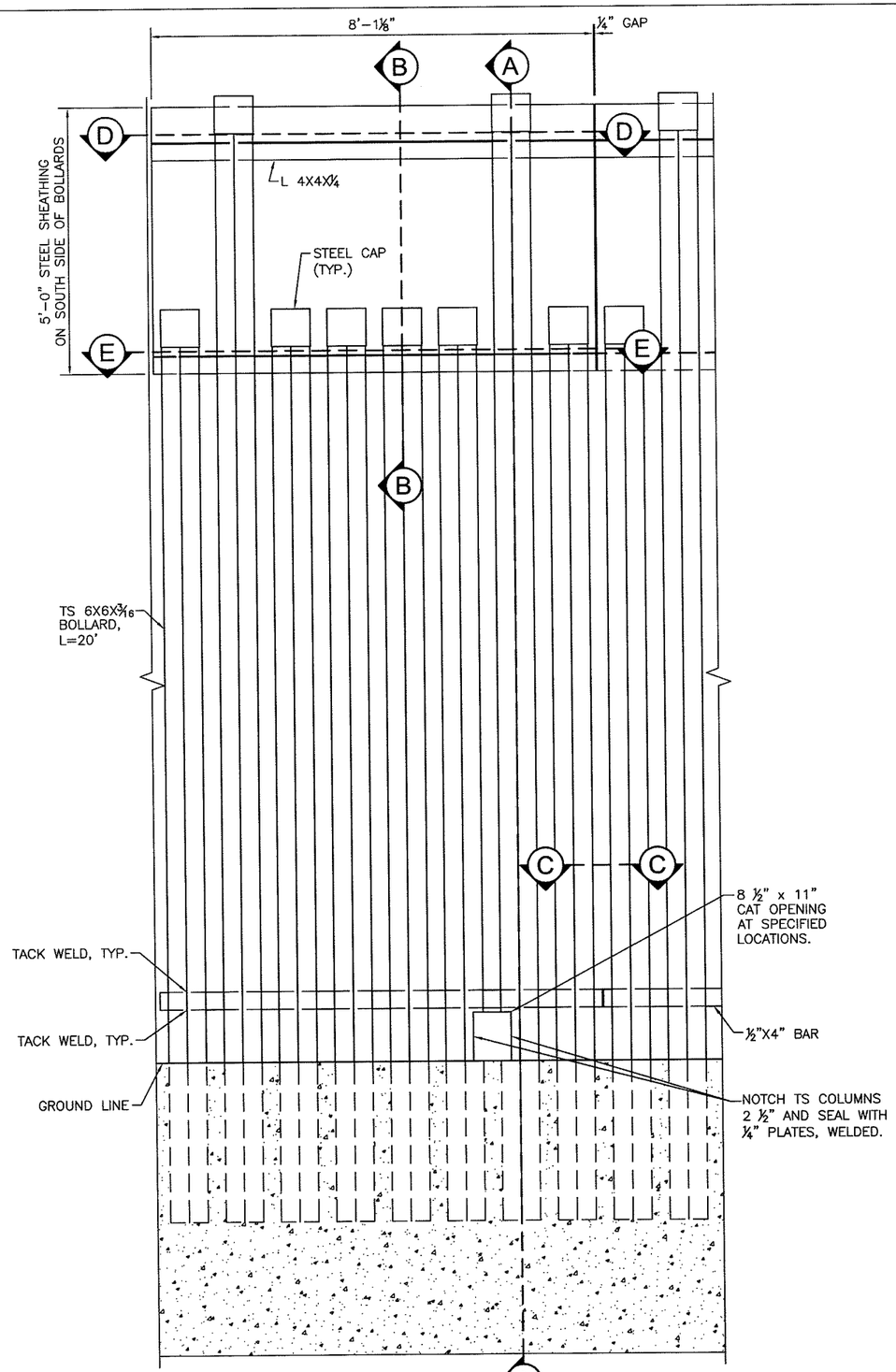

ELEVATION
(LOOKING SOUTH)

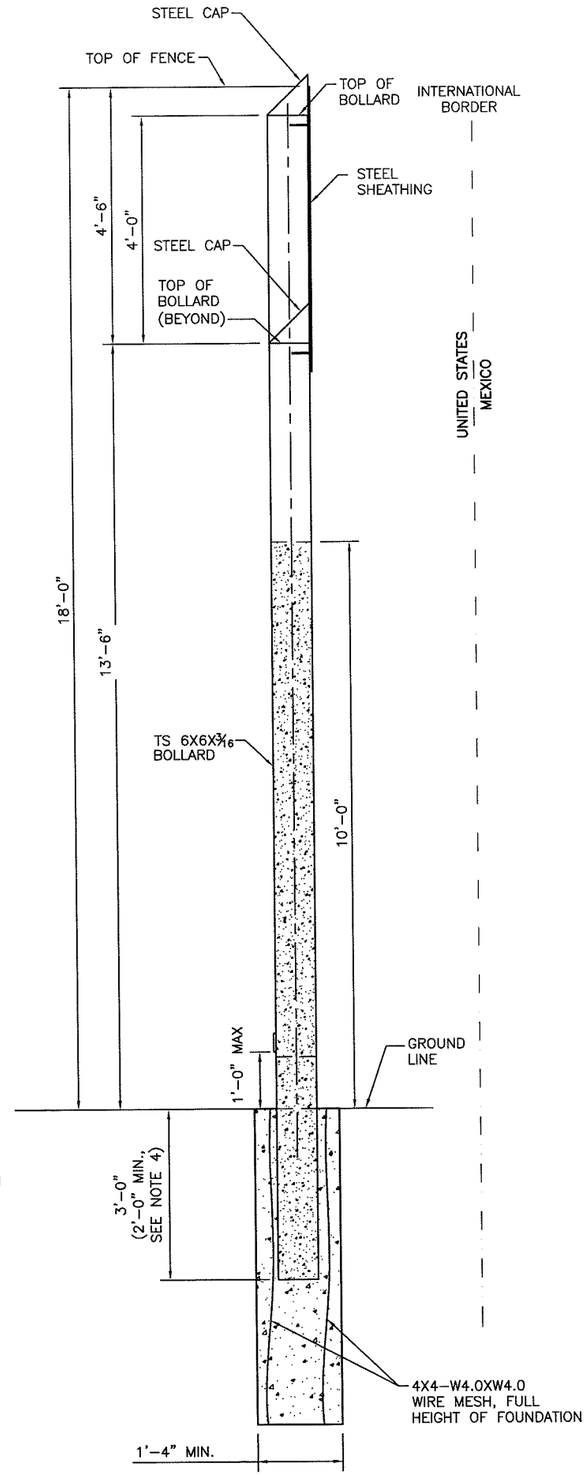

SECTION A-A

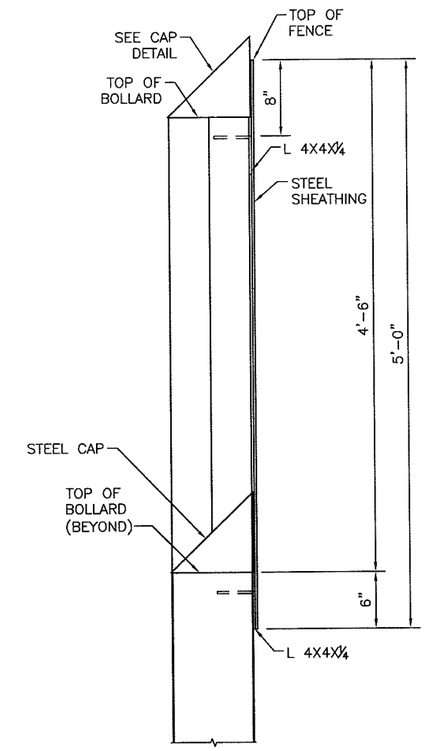

SECTION B-B

NOTE:
1. FOUNDATION DETAILS SHOWN REPRESENT MINIMUM DIMENSIONAL REQUIREMENTS AND MAY NEED TO BE INCREASED BASED ON FINAL DESIGN.

2. SEE REQUEST FOR PROPOSAL DESIGN CRITERIA FOR ADDITIONAL INFORMATION.

3. THIS DRAWING PROVIDES GENERAL DESIGN AND CONSTRUCTION DETAILS. FINAL PLANS SHALL SHOW SPECIAL NOTES AND DETAILS WHERE NECESSARY FOR CONDITIONS OTHER THAN THOSE INDICATED HEREIN.

4. ADJACENT PANELS MAY BE STEPPED UP TO 1'-0" TO ACCOMMODATE VARYING TERRAIN. STEEPER TERRAIN MAY REQUIRE SPECIAL DESIGN CONSIDERATIONS.

US Army Corps of Engineers
Fort Worth District

Mark	Description	Date	Appr.

Baker
MICHAEL BAKER JR., INC.
2929 NORTH CENTRAL AVENUE
SUITE 800
PHOENIX, AZ 85012

Designed by: KAS		Date: 4-2-08	Rev.
Dwn by: MDC/MKB	Ckd by: JWB	Submitted by: Michael Baker Jr., Inc.	
Reviewed by: TQ		Plot date: 4/3/08	Baker Project No: 112319

PF225 STANDARD FENCE DETAILS

PERSONNEL - VEHICLE TYPE 1

SHEET REFERENCE NUMBER:
PV-1
SHEET 1 OF 2

I:\projects\usace\pf225\drawings\pf225pv-1.dwg

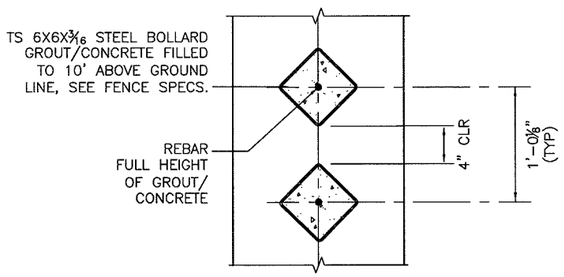

SECTION C-C

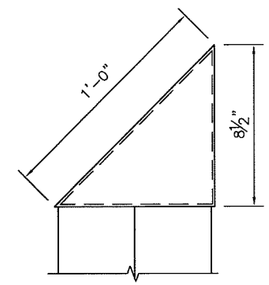

SIDE VIEW

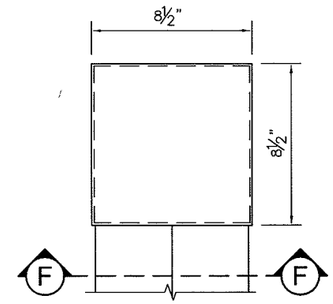

ELEVATION VIEW

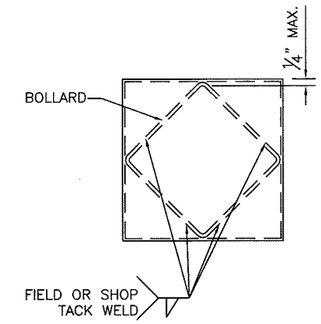

SECTION F-F

CAP DETAIL

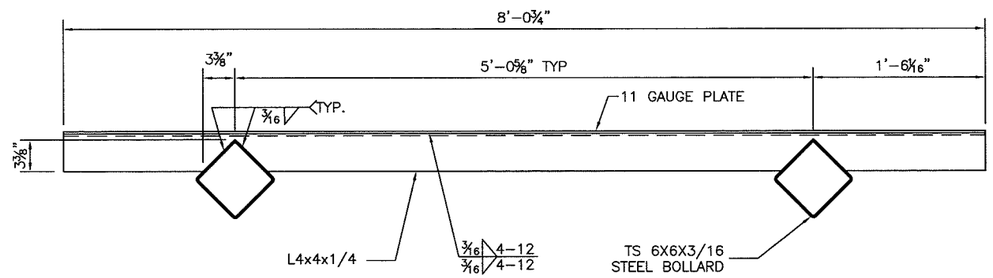

SECTION D-D

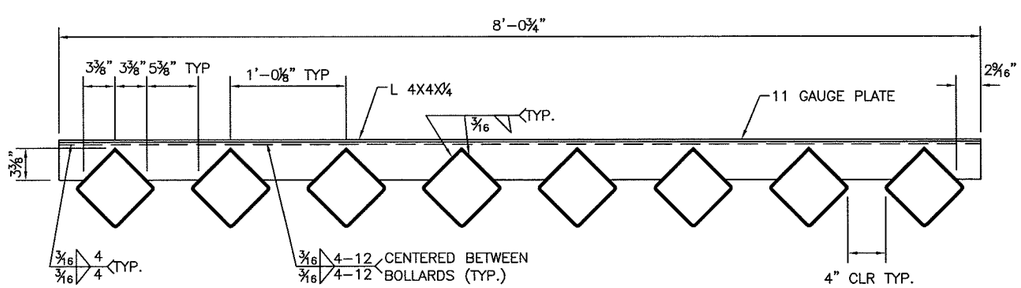

SECTION E-E

NOTE:
1. CAP DETAIL SHALL BE FABRICATED OF 11 GAUGE PLATE.

2. CAP DETAIL SHALL BE FABRICATED AS A CLOSED, FIVE-SIDED SHAPE CONSISTING OF BENT AND/OR STRAIGHT PLATES CONNECTED BY CONTINUOUS WELDS.

US Army Corps of Engineers
Fort Worth District

Mark	Description	Date	Appr.

Baker
MICHAEL BAKER JR., INC
2929 NORTH CENTRAL AVENUE
SUITE 800
PHOENIX, AZ 85012

Designed by: KAS		Date: 4-2-08	Rev.
Dwn by: MDC	Ckd by: JWB	Submitted by: Michael Baker Jr., Inc.	
Reviewed by: TQ		Plot date: 4/3/08	Baker Project No: 112319

PF225 STANDARD FENCE DETAILS

PERSONNEL - VEHICLE TYPE 1

SHEET REFERENCE NUMBER:
PV-1
SHEET 2 OF 2

I:\projects\usace\pf225\drawings\pf225pv-1.dwg

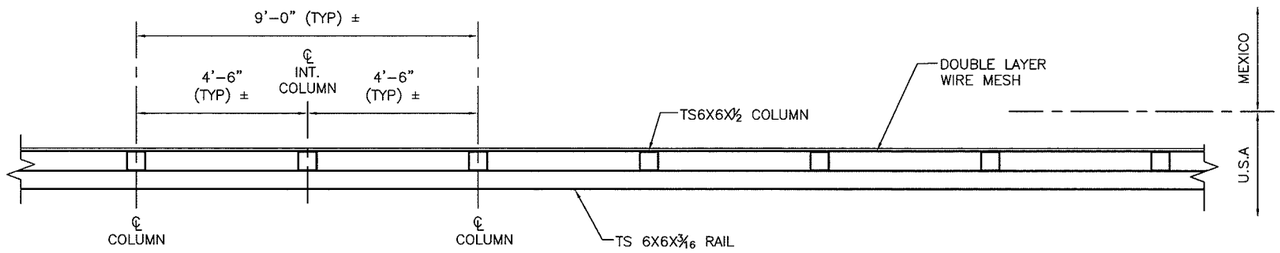

PLAN VIEW

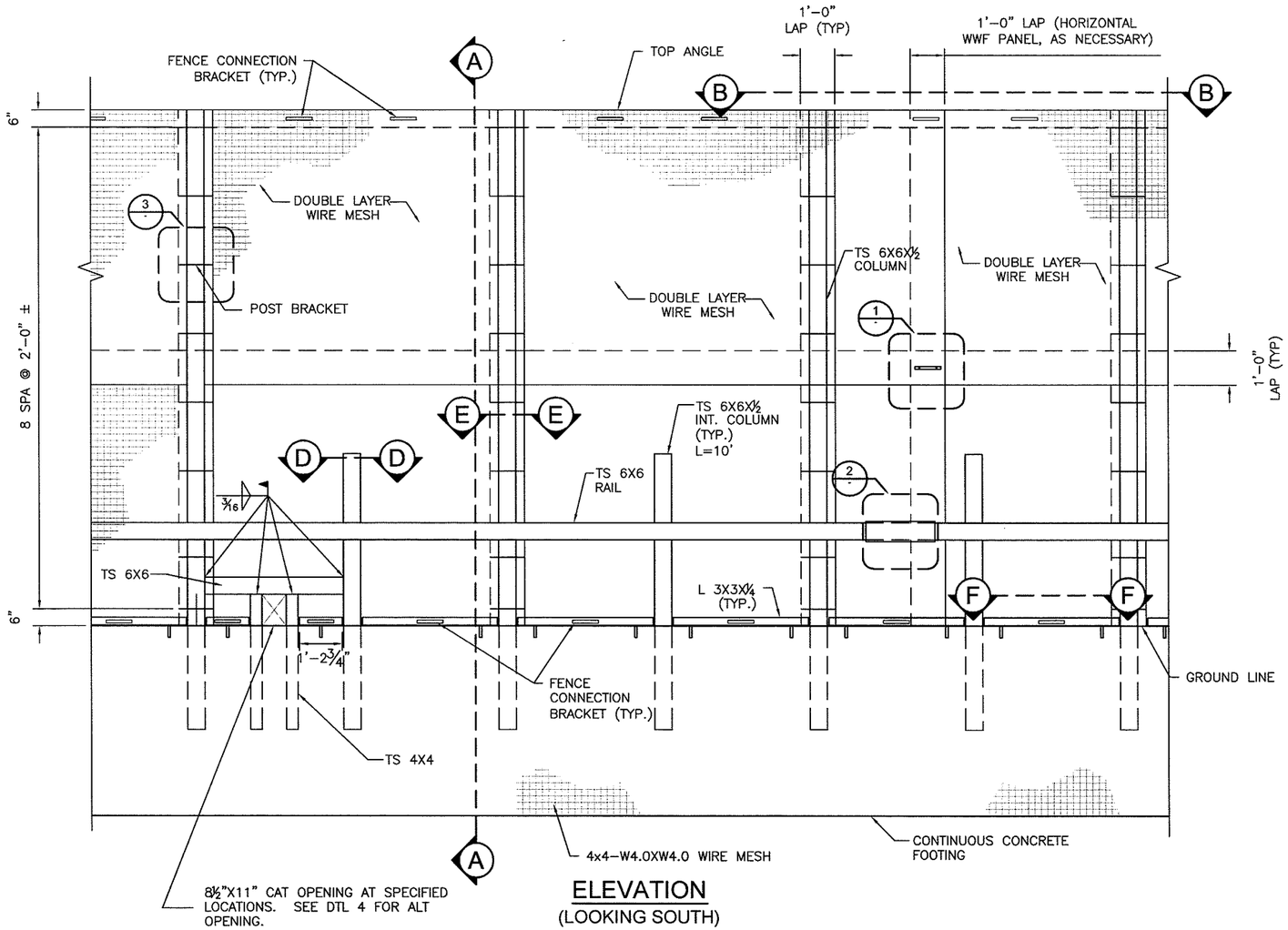

ELEVATION
(LOOKING SOUTH)

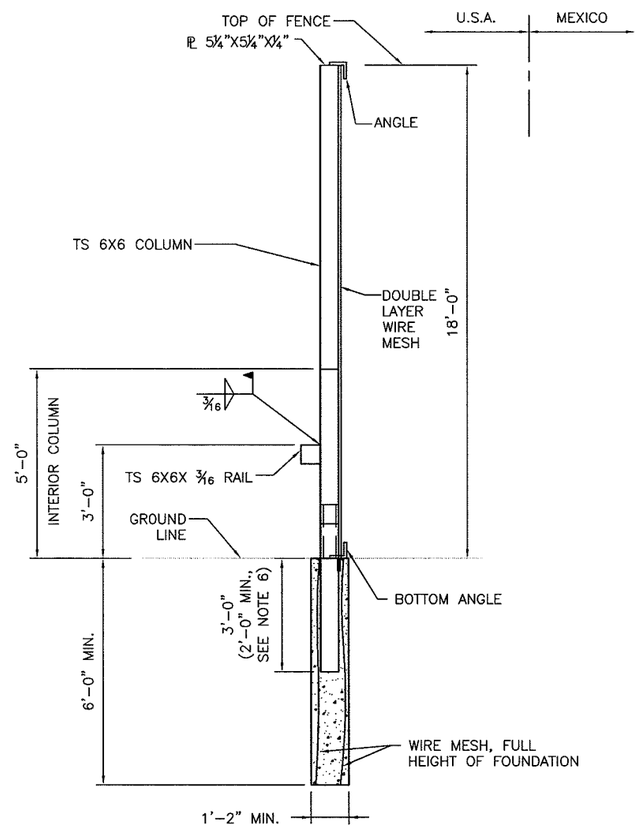

SECTION A-A

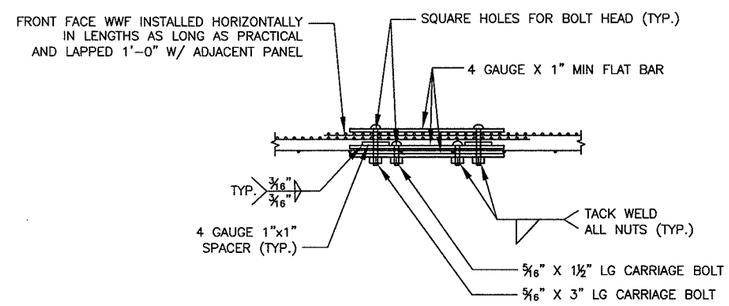

DETAIL 1

NOTES:

1. FOUNDATION DETAILS SHOWN REPRESENT MINIMUM DIMENSIONAL REQUIREMENTS AND SHALL BE INCREASED IF NECESSARY BASED ON FOUNDATION DESIGN.
2. SEE GENERAL NOTES, SHEET N-1, FOR WELDED WIRE MESH SPECIFICATIONS.
3. CAT OPENING TO BE 8½"X11". AMPHIBIAN/REPTILE OPENING TO BE 5" SQUARE.
4. SEE REQUEST FOR PROPOSAL DESIGN CRITERIA FOR ADDITIONAL INFORMATION.
5. THIS DRAWING PROVIDES GENERAL DESIGN AND CONSTRUCTION DETAILS. FINAL PLANS SHALL SHOW SPECIAL NOTES AND DETAILS WHERE NECESSARY FOR CONDITIONS OTHER THAN THOSE INDICATED HEREIN.
6. ADJACENT PANELS MAY BE STEPPED UP TO 1'-0" TO ACCOMMODATE VARYING TERRAIN. STEEPER TERRAIN MAY REQUIRE SPECIAL DESIGN CONSIDERATIONS.

US Army Corps of Engineers
Fort Worth District

Mark	Description	Date	Appr.

Baker
MICHAEL BAKER JR., INC
2929 NORTH CENTRAL AVENUE
SUITE 600
PHOENIX, AZ 85012

Designed by: KAS		Date: 4-2-08	Rev.
Dwn by: KAS	Ckd by: JWB	Submitted by: Michael Baker Jr., Inc.	
Reviewed by: TQ		Plot date: 4/3/08	Baker Project No: 112319

PF225 STANDARD FENCE DETAILS

PERSONNEL - VEHICLE TYPE 2

SHEET REFERENCE NUMBER:
PV-2
SHEET 1 OF 2

\\projects\usace\pf225\drawings\pf225pv-2.dwg

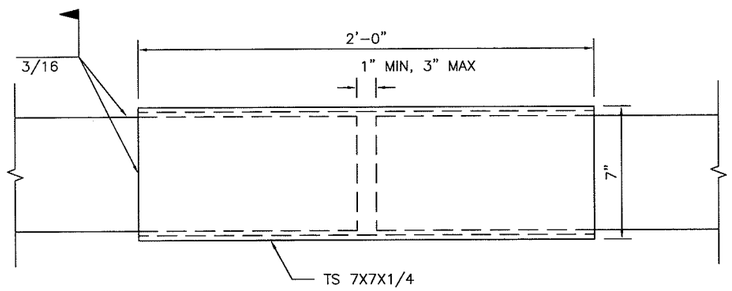

DETAIL 2
RAIL SPLICE (36' MAX SPACE)

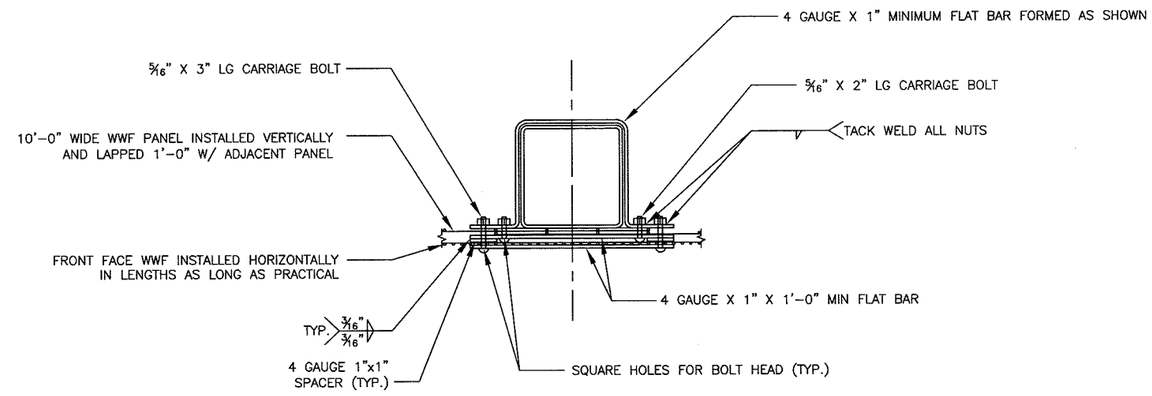

DETAIL 3
POST BRACKET

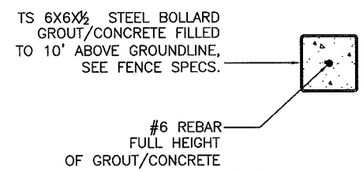

SECTION E-E

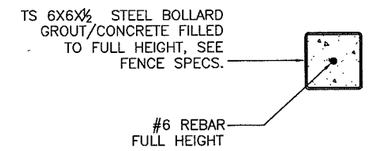

SECTION D-D

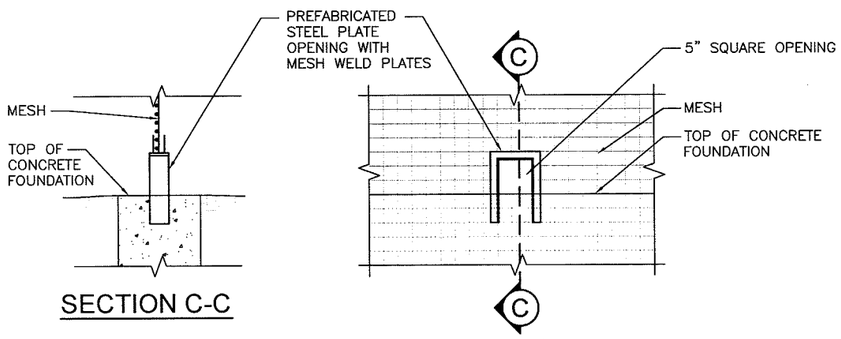

SECTION C-C

DETAIL 4
AMPHIBIAN / REPTILE OPENING

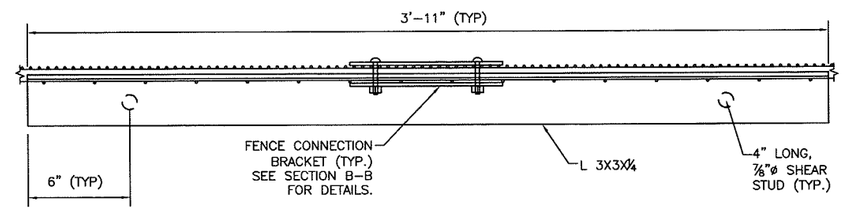

SECTION F-F
BOTTOM ANGLE DETAIL

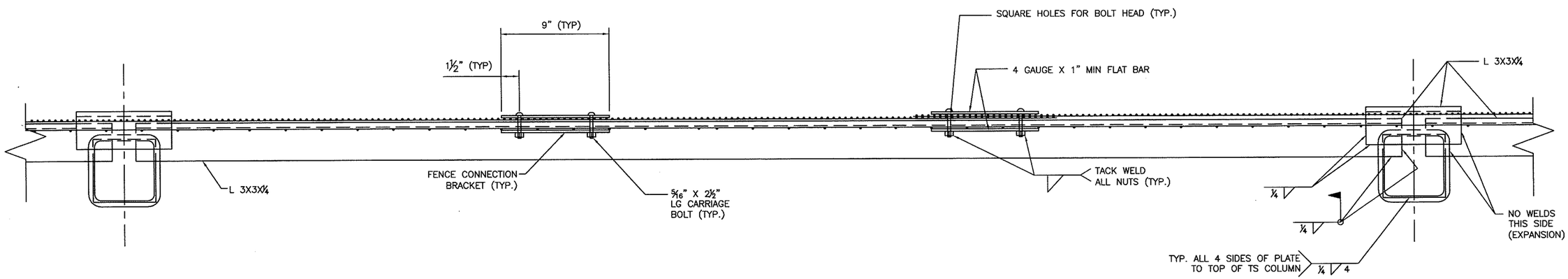

SECTION B-B
TOP HORIZONTAL RAIL DETAIL

US Army Corps of Engineers
Fort Worth District

Mark	Description	Date	Appr.

Baker
MICHAEL BAKER JR., INC.
7200 NORTH CENTRAL AVENUE
SUITE 800
PHOENIX, AZ 85012

Designed by: KAS | Date: 4-2-08 | Rev.
Dwn by: KAS | Ckd by: JWB | Submitted by: Michael Baker Jr., Inc.
Reviewed by: TQ | Plot date: 4/3/08 | Baker Project No: 112319

PF225 STANDARD FENCE DETAILS

PERSONNEL - VEHICLE TYPE 2

SHEET REFERENCE NUMBER:
PV-2
SHEET 2 OF 2

t:\projects\usace\pf225\drawings\pf225pv-2.dwg

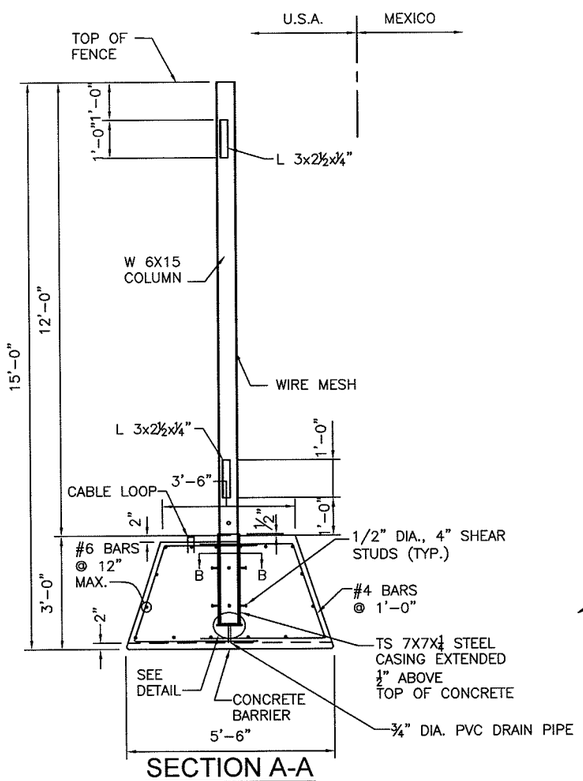

SECTION A-A

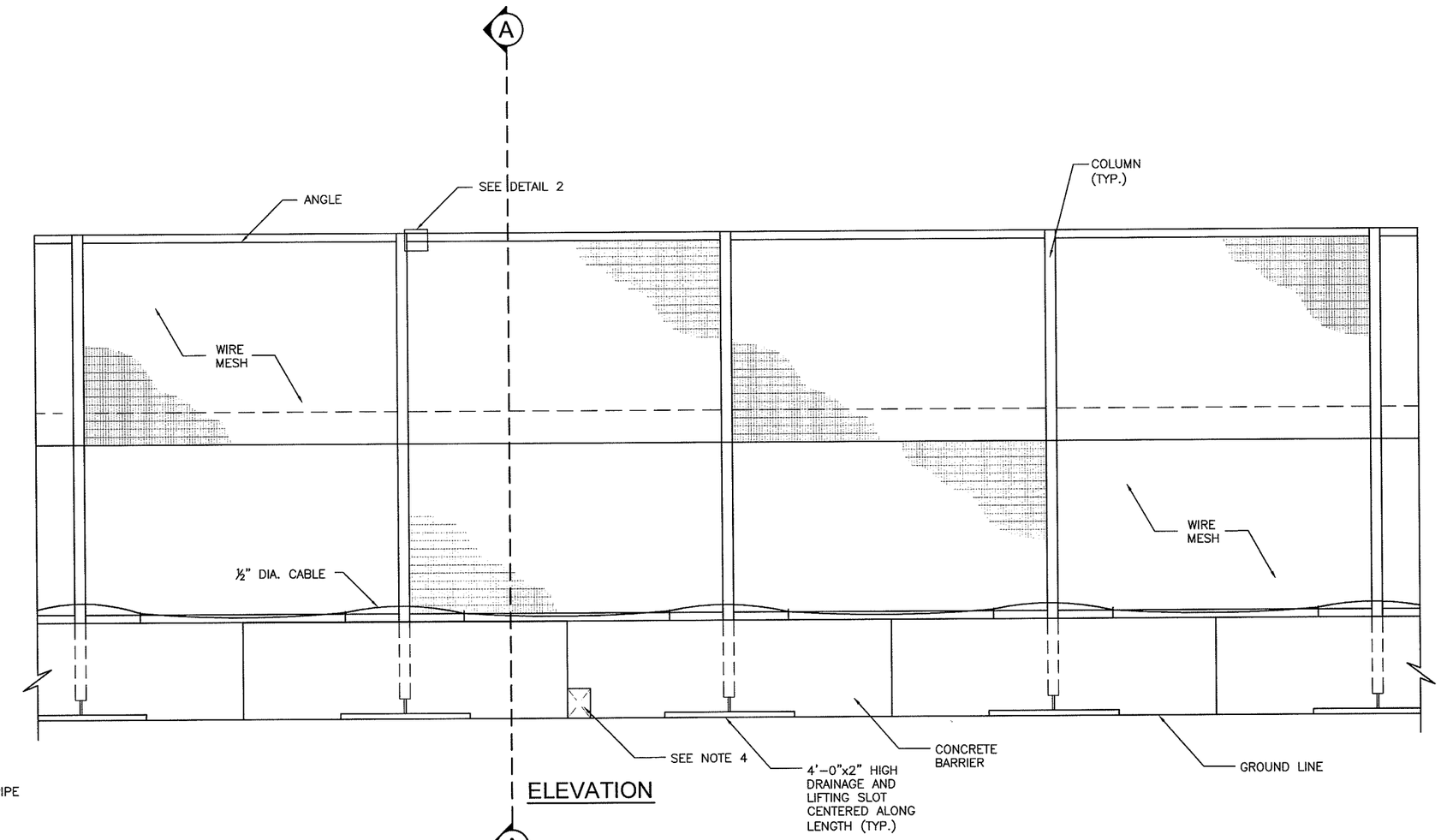

ELEVATION

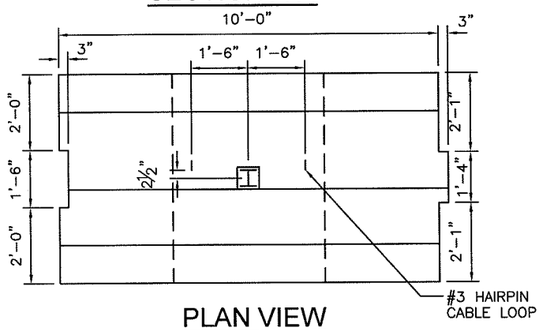

PLAN VIEW
10' CONCRETE SEGMENT

SECTION B-B

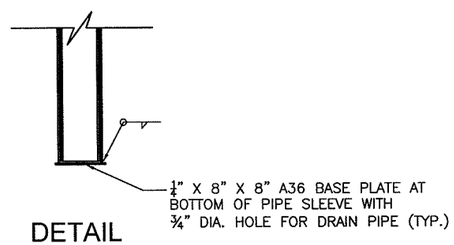

DETAIL

NOTE:

1. THIS FENCE CONSTRUCTION IS INTENDED TO BE DISMANTLED READILY. COORDINATE WITH BORDER CONTROL ON LOCATION AND NUMBER OF LOCK POINTS FOR ½" CABLE.
2. SEE GENERAL NOTES, SHEET N-1, FOR WELDED WIRE MESH SPECIFICATIONS..
3. CAT OPENING TO BE 8½"X11". AMPHIBIAN/REPTILE OPENING TO BE 5" SQUARE.
4. THE FENCE, AS DESIGNED, PRODUCES A MAXIMUM SERVICE LOAD BEARING PRESSURE OF 700 PSF. MODIFICATIONS TO THE CONCRETE BASE GEOMETRY MAY BE REQUIRED DEPENDING ON ALLOWABLE BEARING CAPACITIES OF ANY SITE, WHICH SHALL BE DETERMINED BY A GEOTECHNICAL ENGINEER.
5. SEE REQUEST FOR PROPOSAL DESIGN CRITERIA FOR ADDITIONAL INFORMATION.
6. THIS DRAWING PROVIDES GENERAL DESIGN AND CONSTRUCTION DETAILS. FINAL PLANS SHALL SHOW SPECIAL NOTES AND DETAILS WHERE NECESSARY FOR CONDITIONS OTHER THAN THOSE INDICATED HEREIN.

US Army Corps of Engineers
Fort Worth District

Mark	Description	Date	Appr.

Baker
MICHAEL BAKER JR., INC
2929 NORTH CENTRAL AVENUE
SUITE 690
PHOENIX, AZ 85012

Designed by: KAS	Date: 4-2-08	Rev.
Dwn by: KAS/KNB	Ckd by: JWB	Submitted by: Michael Baker Jr., Inc.
Reviewed by: TQ		Plot date: 4/3/08
		Baker Project No: 112319

PF225 STANDARD FENCE DETAILS

PERSONNEL - VEHICLE TYPE 3

SHEET REFERENCE NUMBER:
PV-3
SHEET 1 OF 2

I:\projects\usace\pf225\drawings\pf225\pv-3.dwg

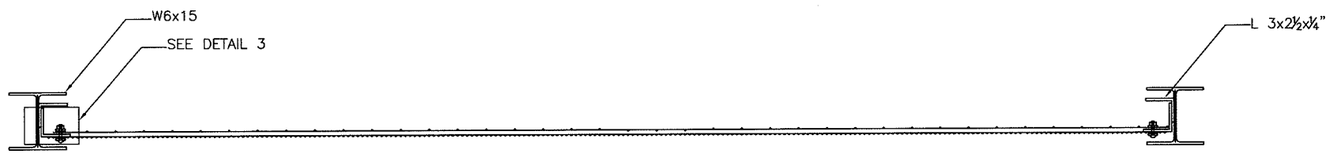

SECTION B-B

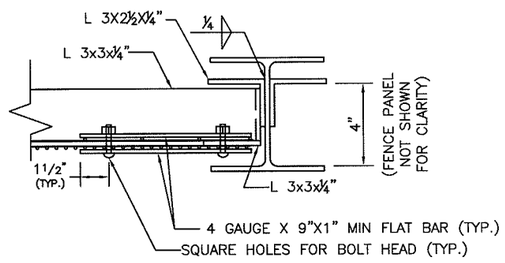

DETAIL 2
FENCE FABRIC ATTACHMENT

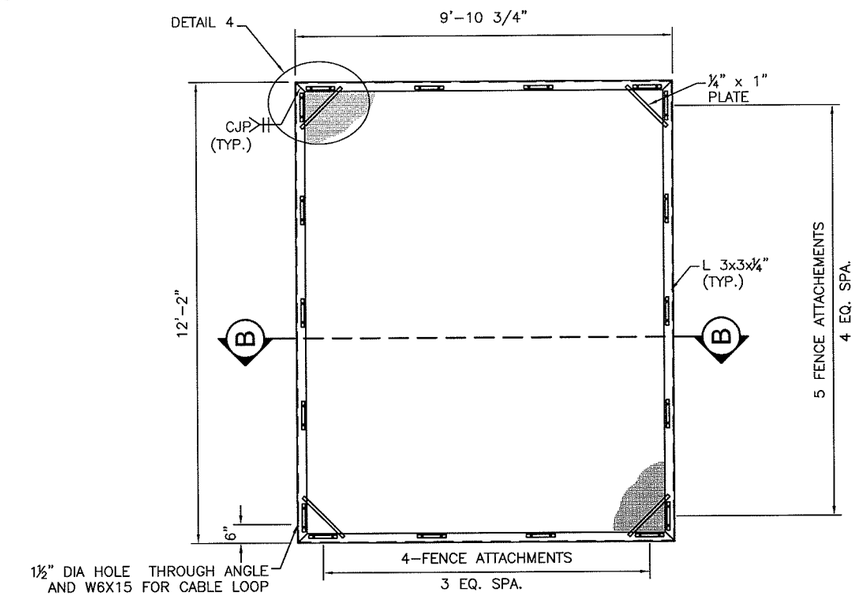

STANDARD FENCE PANEL

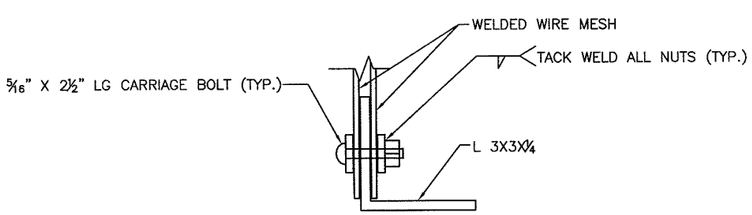

DETAIL 3

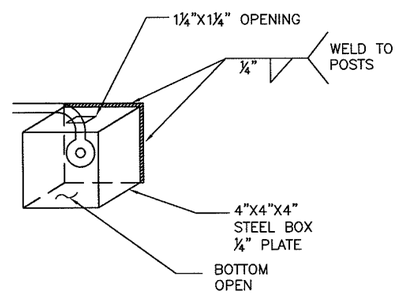

LOCK BOX DETAIL

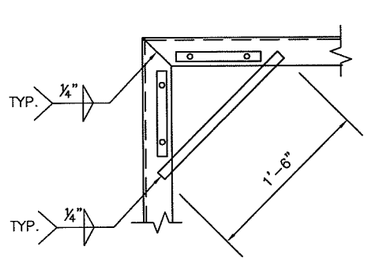

DETAIL 4

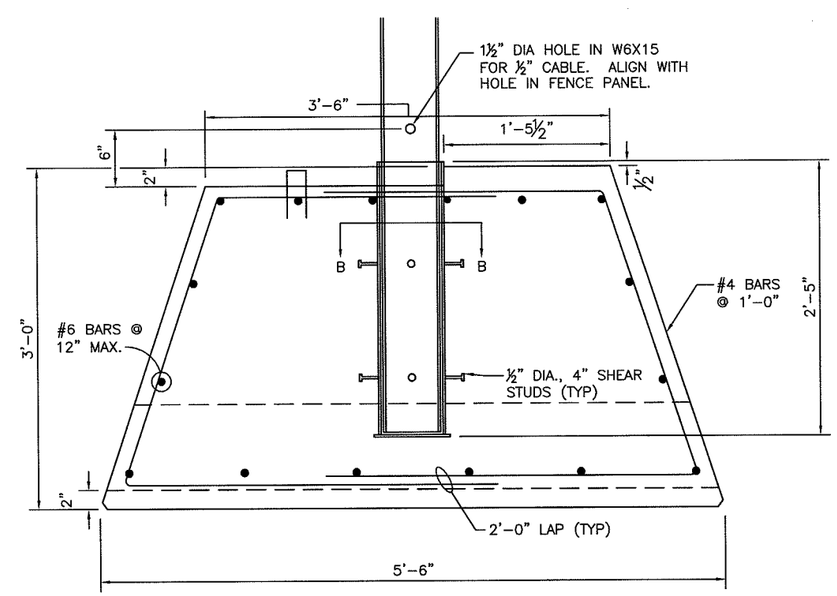

DETAIL 5

US Army Corps of Engineers
Fort Worth District

Mark	Description	Date	Appr.

Baker
MICHAEL BAKER JR., INC
2929 NORTH CENTRAL AVENUE
SUITE 800
PHOENIX, AZ 85012

Designed by: RB	Date: 4-2-08	Rev.	
Dwn by: JN	Ckd by: TEQ	Submitted by: Michael Baker Jr., Inc.	
Reviewed by: DJL	Plot date: 4/3/08	Baker Project No: 112319	

PF225 STANDARD FENCE DETAILS

PERSONNEL - VEHICLE TYPE 3

SHEET REFERENCE NUMBER:
PV-3
SHEET 2 OF 2

I:\projects\usace\pf225\drawings\pf225\pv-3.dwg

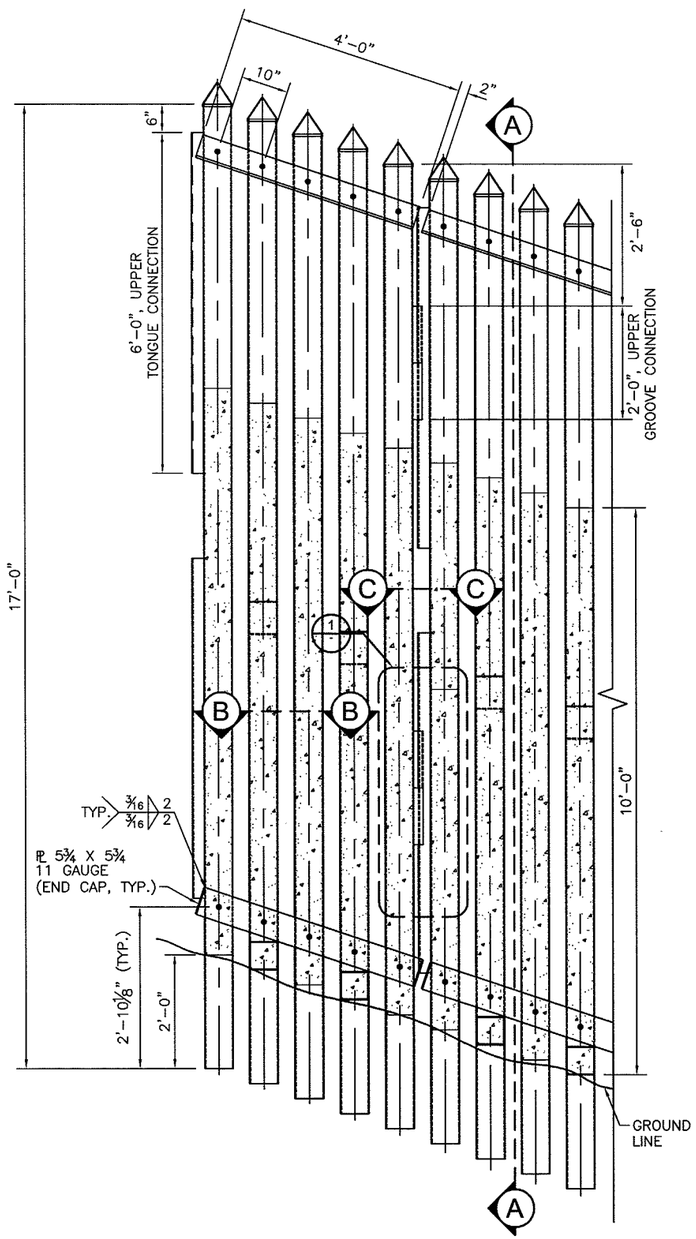

ELEVATION
(LOOKING SOUTH)

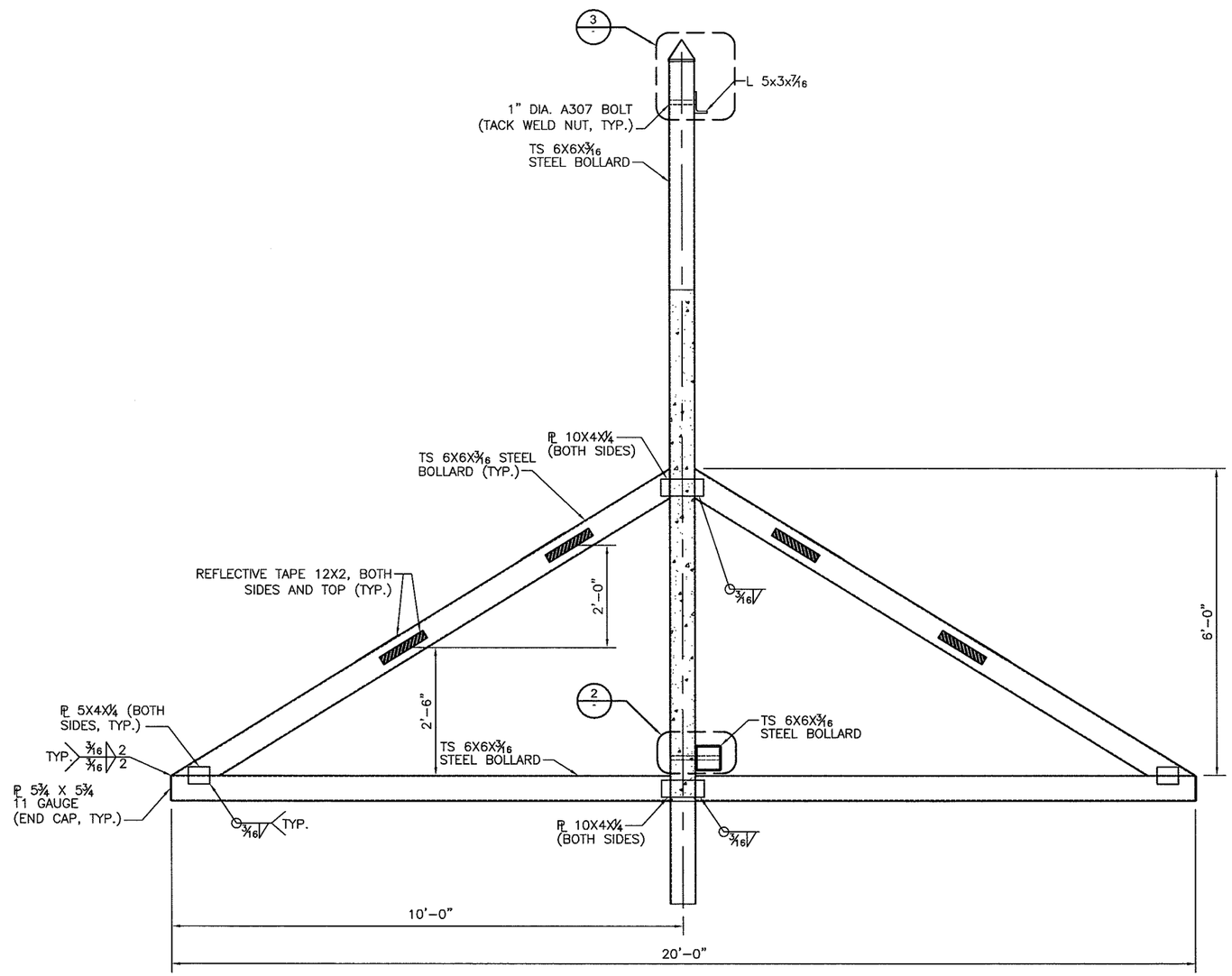

SECTION A-A

US Army Corps
of Engineers
Fort Worth District

Mark	Description	Date	Appr.

Baker
MICHAEL BAKER JR., INC
2929 NORTH CENTRAL AVENUE
SUITE 930
PHOENIX, AZ 85012

Designed by: KAS		Date: 4-2-08	Rev.
Dwn by: KAS	Ckd by: JWB	Submitted by: Michael Baker Jr., Inc.	
Reviewed by: TQ		Plot date: 4/3/08	Baker Project No: 112319

PF225 STANDARD FENCE DETAILS

VEHICLE
TYPE PV-4

SHEET REFERENCE NUMBER:
PV-4
SHEET 1 OF 2

I:\projects\usace\pf225\drawings\pf225pv-4.dwg ----

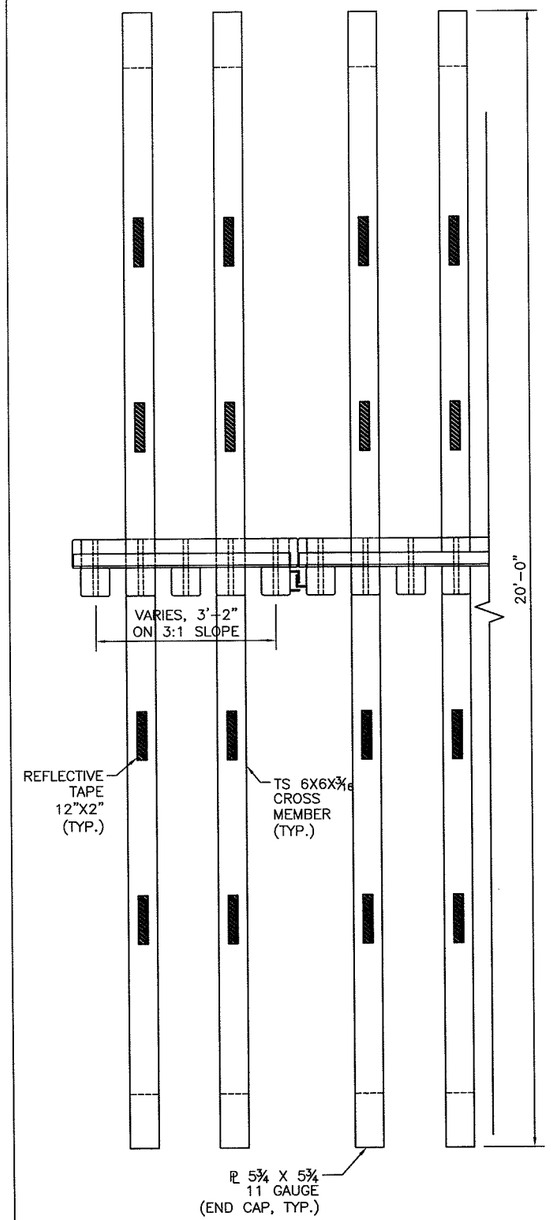

PLAN

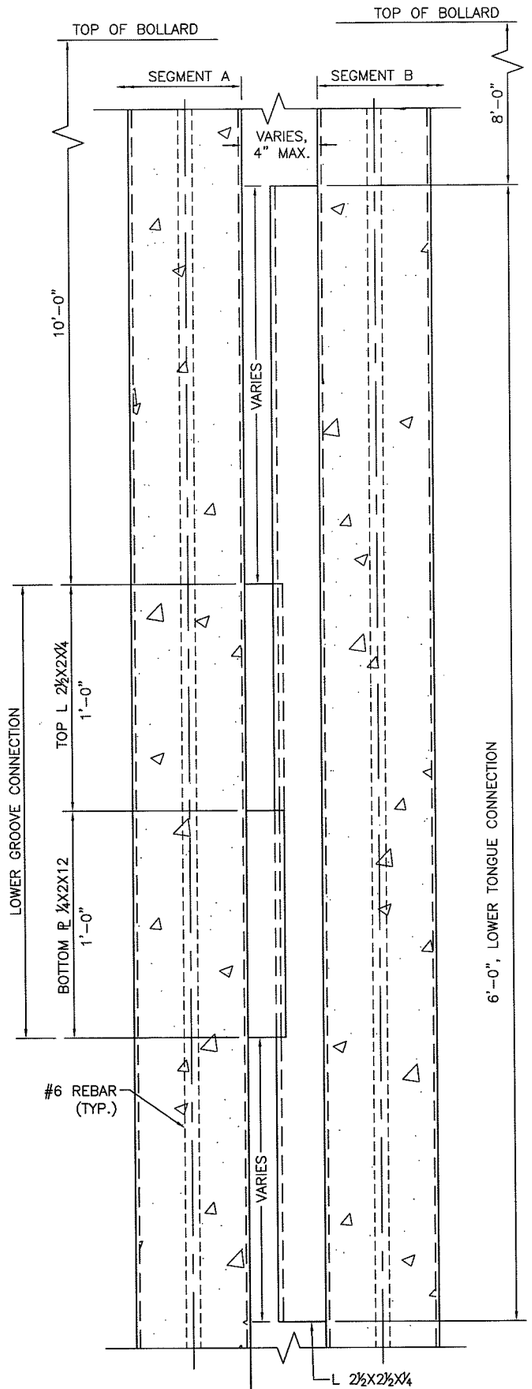

DETAIL 1
TONGUE AND GROOVE
CONNECTION DETAILS

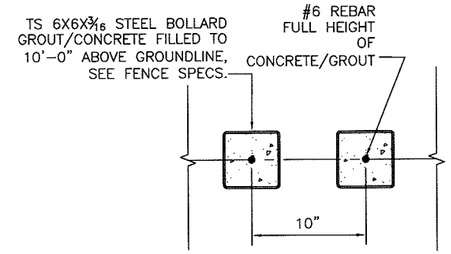

SECTION B-B

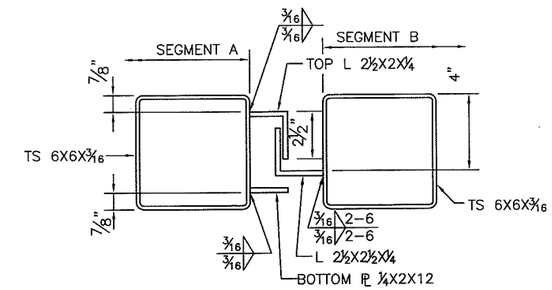

SECTION C-C

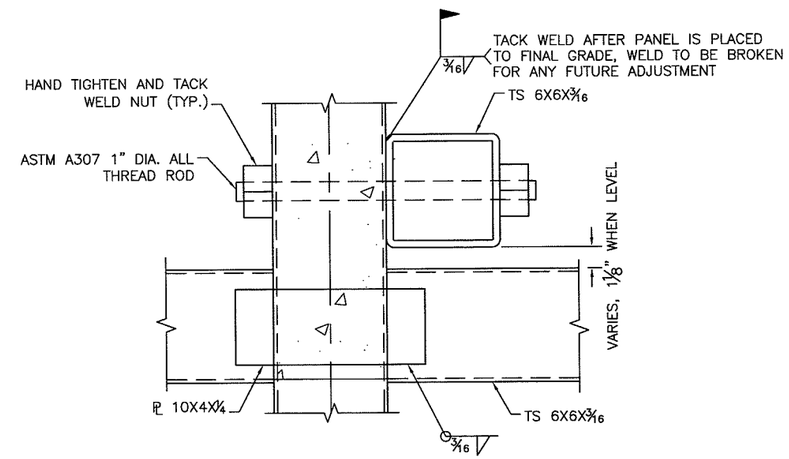

DETAIL 2

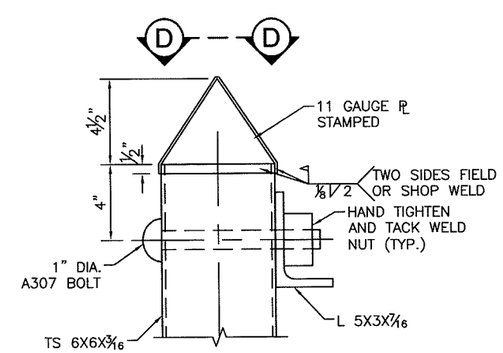

CAP DETAIL

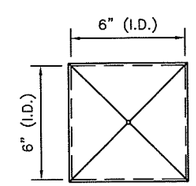

SECTION D-D

US Army Corps of Engineers
Fort Worth District

Mark	Description	Date	Appr.

Baker
MICHAEL BAKER JR., INC.
2929 NORTH CENTRAL AVENUE
SUITE 600
PHOENIX, AZ 85012

Designed by: KAS	Date: 4-2-08	Rev.	
Dwn by: MDC	Ckd by: JWB	Submitted by: Michael Baker Jr., Inc.	
Reviewed by: TQ		Plot date: 4/3/08	Baker Project No: 112319

PF225
STANDARD
FENCE
DETAILS

VEHICLE
TYPE PV-4

SHEET REFERENCE NUMBER:
PV-4
SHEET 2 OF 2

I:\projects\usace\pf225\drawings\pf225\pv-4.dwg

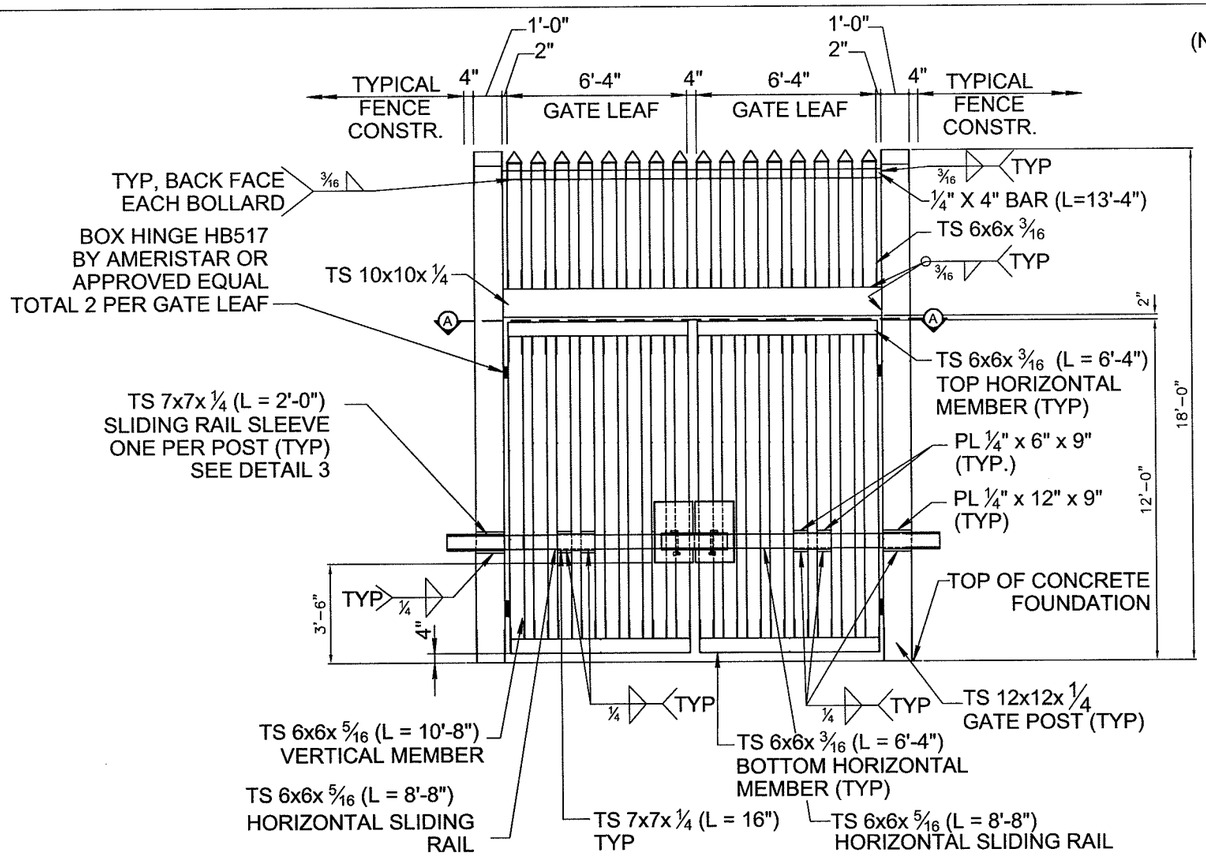

TYPICAL ELEVATION - BOLLARD GATE

SCALE: ~3/16" = 1'-0"

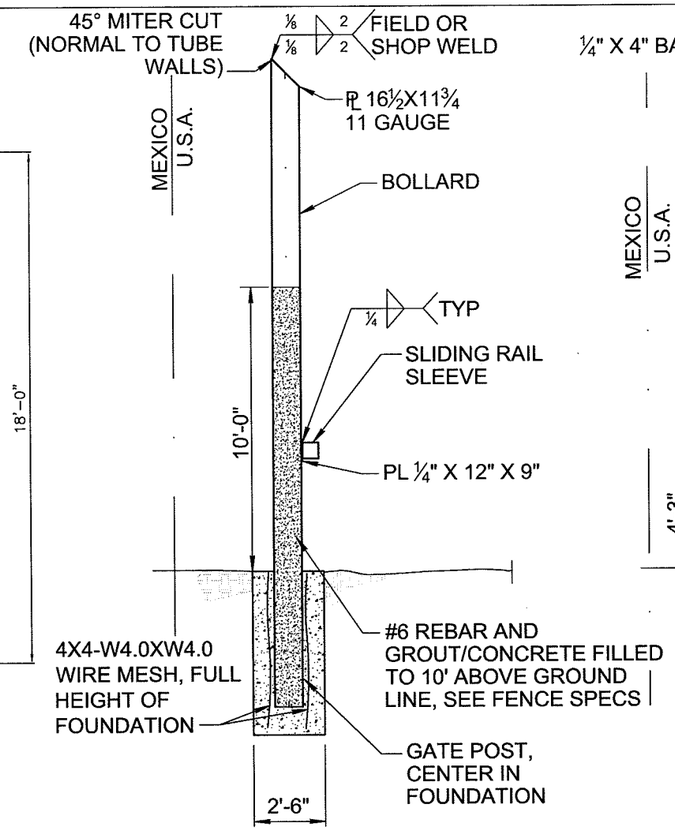

TYPICAL SECTION AT POST

SCALE: ~3/16" = 1'-0"

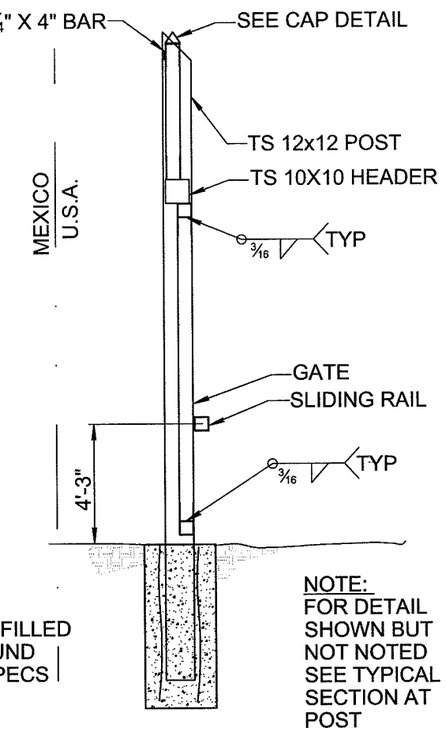

TYPICAL SECTION AT GATE

SCALE: ~3/16" = 1'-0"

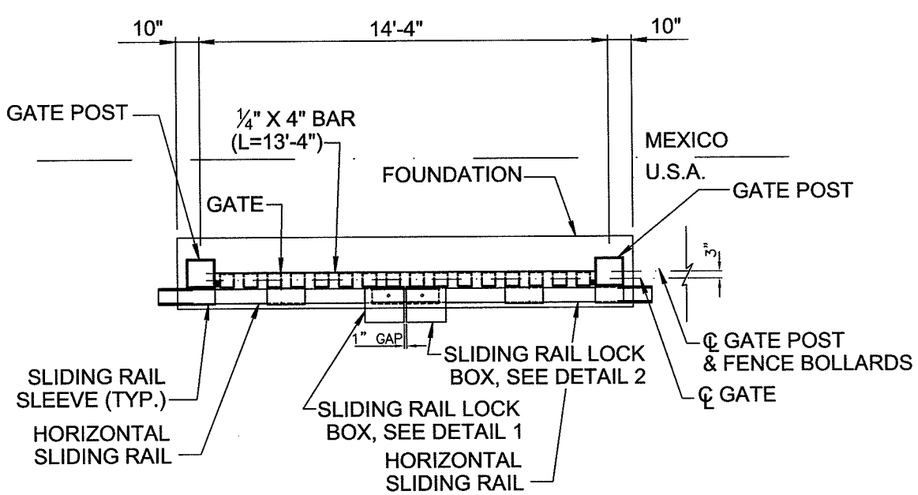

SECTION A - A

SCALE: ~3/16" = 1'-0"

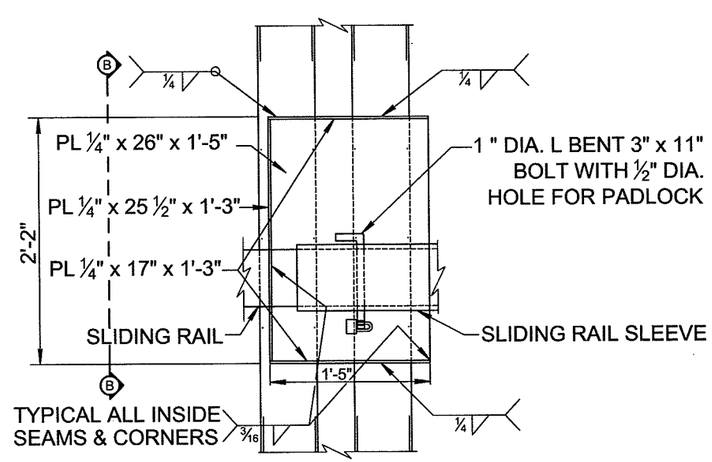

DETAIL 1 - LOCK BOX

NO SCALE:

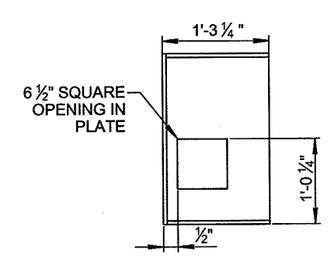

VIEW B-B

US Army Corps of Engineers
Fort Worth District

Mark	Description	Date	Appr.

Baker
MICHAEL BAKER JR., INC
ARIZONA BRANCH OFFICE
2020 NORTH CENTRAL AVENUE
SUITE 800
PHOENIX, AZ 85012

Designed by: KAS	Date: 4-2-08	Rev.
Dwn by: MKB	Ckd by: JWB	Submitted by: Michael Baker Jr., Inc.
Reviewed by: TQ	Plot date: 4/3/08	Baker Project No: 112319

PF225 STANDARD FENCE DETAILS

PERSONNEL - VEHICLE GATE DETAIL

SHEET REFERENCE NUMBER:
G-1
SHEET 1 OF 2

I:\projects\usace\pf225\drawings\pf225g-1.dwg

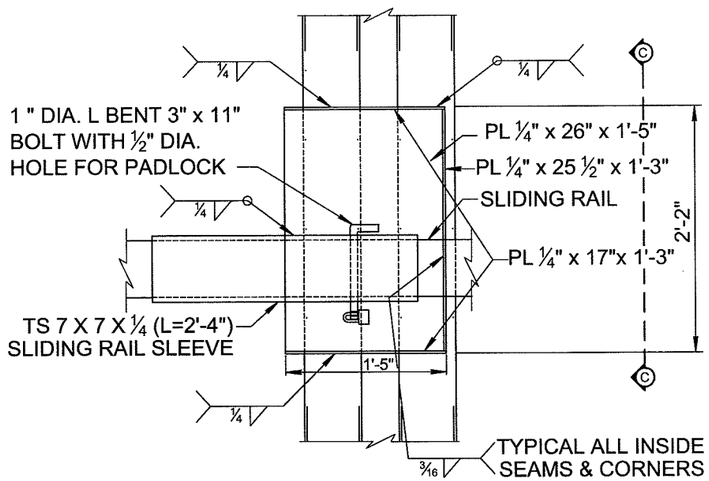

DETAIL 2 - LOCK BOX

NO SCALE:

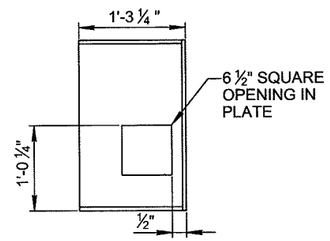

VIEW C-C

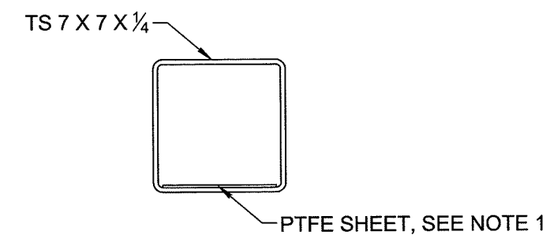

DETAIL 3 - SLIDING RAIL SLEEVE ON POST

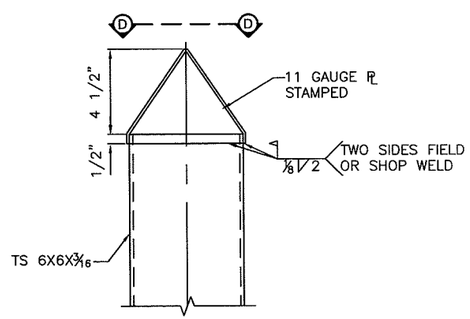

CAP DETAIL

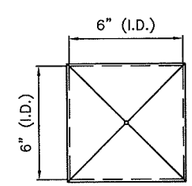

VIEW D-D

NOTES:

1.) ALL SLIDING RAIL SLEEVES SHALL HAVE A 6" STRIP OF POLYTETRAFLUOROETHYLENE (PTFE) SKIVED SHEET FASTENED TO THE BOTTOM INSIDE FACE OF THE SLEEVE, FOR THE FULL LENGTH OF EACH SLEEVE. THE PTFE SHEET SHALL CONFORM TO ASTM D 3308. THE PTFE SHEET SHALL BE ATTACHED USING AN EPOXY THAT CONFORMS TO FEDERAL SPECIFICATION MMM-A-134. THE PTFE SHEET SHALL BE ETCHED ON THE SURFACE BONDED TO THE STEEL SLEEVE. SURFACE PREPARATION OF THE STEEL SHALL CONSIST OF DEGREASING AND ABRADING THE SURFACE AND CLEANSING WITH A SOLVENT WIPE PRIOR TO APPLYING EPOXY.

US Army Corps of Engineers
Fort Worth District

Mark	Description	Date	Appr.

Baker
MICHAEL BAKER JR., INC.
2002 NORTH CENTRAL AVENUE
SUITE 600
PHOENIX, AZ 85012

Designed by: KAS		Date: 4-2-08	Rev:
Dwn by: MKB	Ckd by: JWB	Submitted by: Michael Baker Jr., Inc.	
Reviewed by: TQ		Plot date: 4/3/08	Baker Project No: 112319

PF225 STANDARD FENCE DETAILS

PERSONNEL - VEHICLE GATE DETAIL

SHEET REFERENCE NUMBER:
G-1
SHEET 2 OF 2

I:\projects\usace\pf225\drawings\pf225g-1.dwg ----

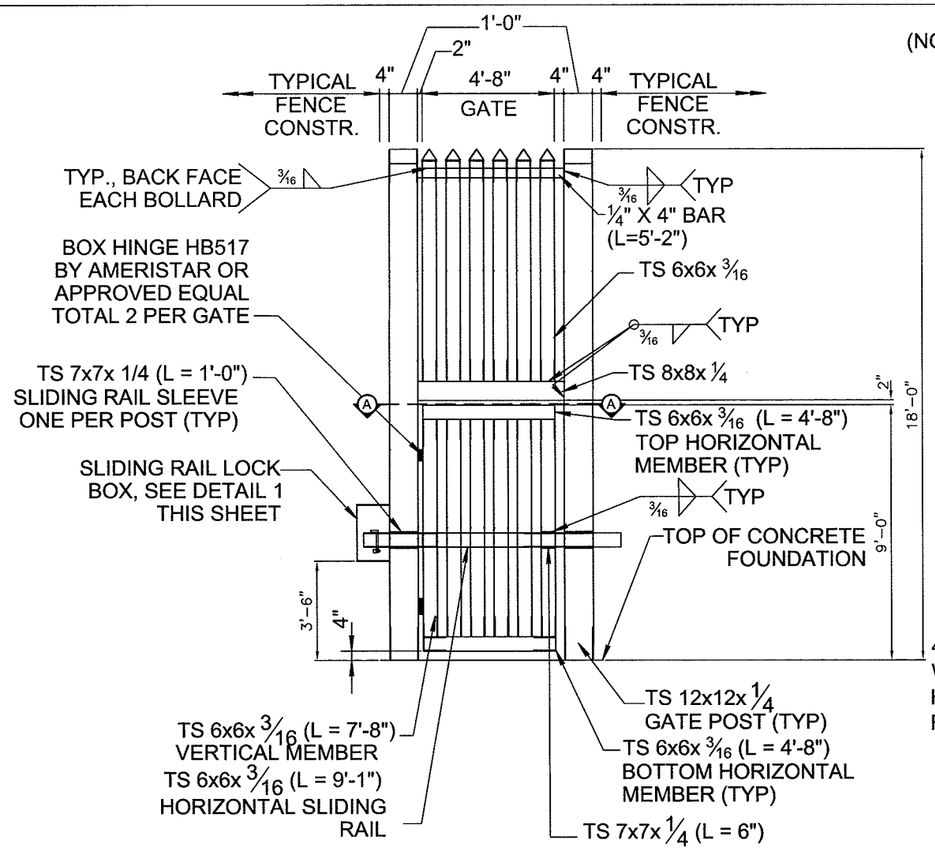

TYPICAL ELEVATION - BOLLARD GATE

SCALE: ~3/16" = 1'-0"

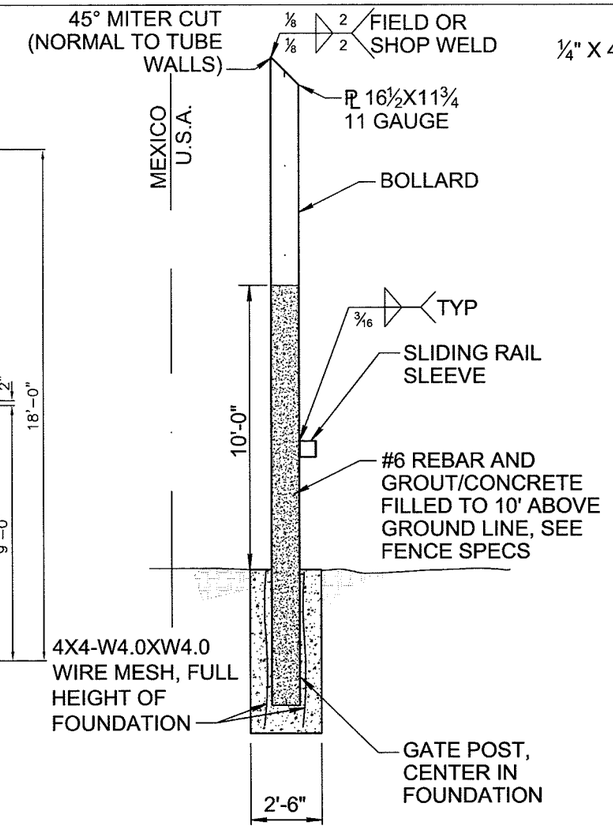

TYPICAL SECTION AT POST

SCALE: ~3/16" = 1'-0"

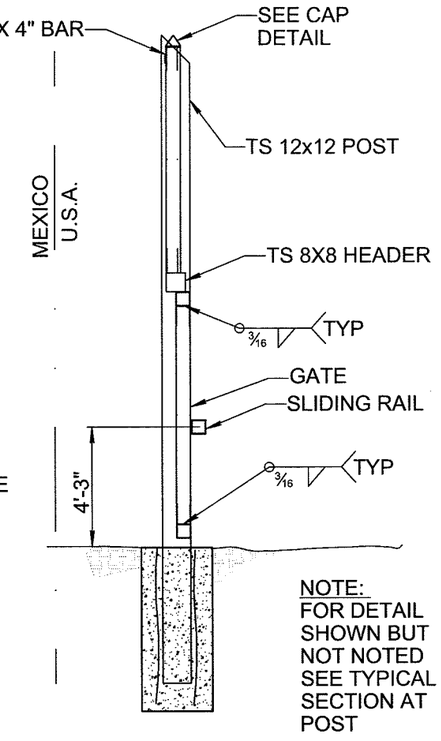

TYPICAL SECTION AT GATE

SCALE: ~3/16" = 1'-0"

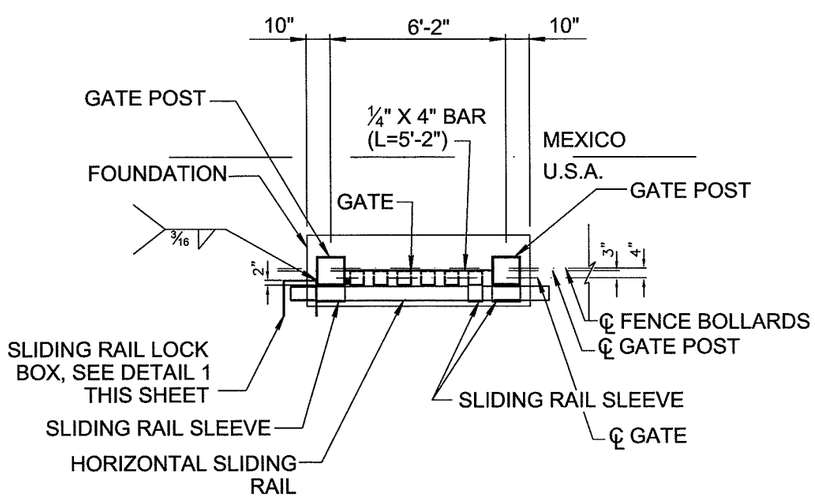

SECTION A-A

SCALE: ~3/16" = 1'-0"

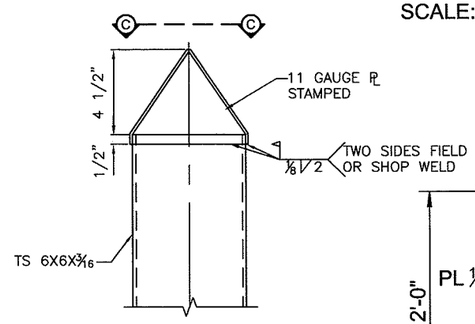

CAP DETAIL

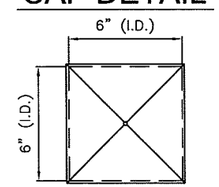

VIEW C-C

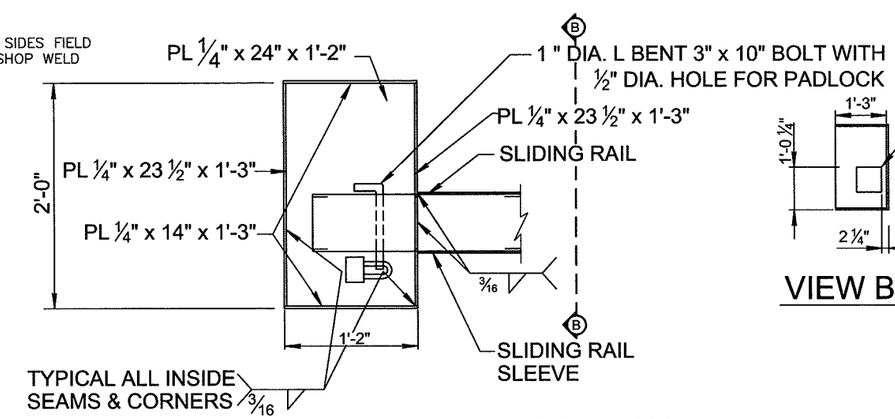

DETAIL 1 - LOCK BOX

NO SCALE:

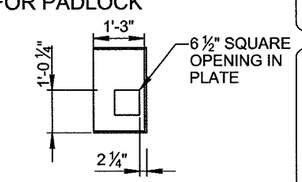

VIEW B-B

US Army Corps of Engineers
Fort Worth District

Mark	Description	Date	Appr.

Baker
MICHAEL BAKER JR., INC
2929 NORTH CENTRAL AVENUE
SUITE 830
PHOENIX, AZ 85012

Designed by: KAS	Date: 4-2-08	Rev.
Dwn by: MKB	Ckd by: JWB	Submitted by: Michael Baker Jr., Inc.
Reviewed by: TQ	Plot date: 4/3/08	Baker Project No: 112319

PF225 STANDARD FENCE DETAILS

PERSONNEL GATE DETAIL

SHEET REFERENCE NUMBER:
G-2
SHEET 1 OF 1

I:\projects\usace\pf225\drawings\pf225g-2.dwg

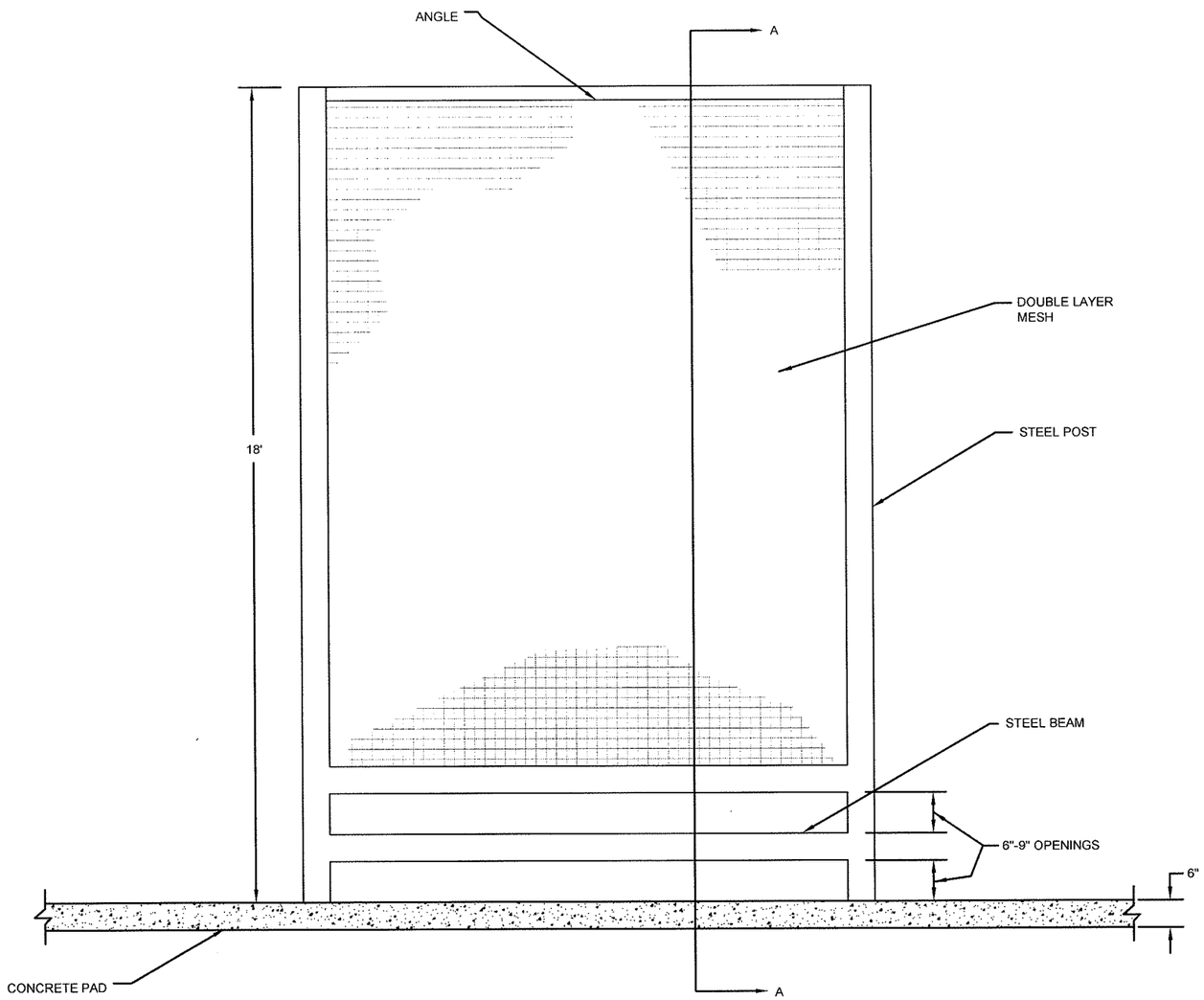

ELEVATION VIEW

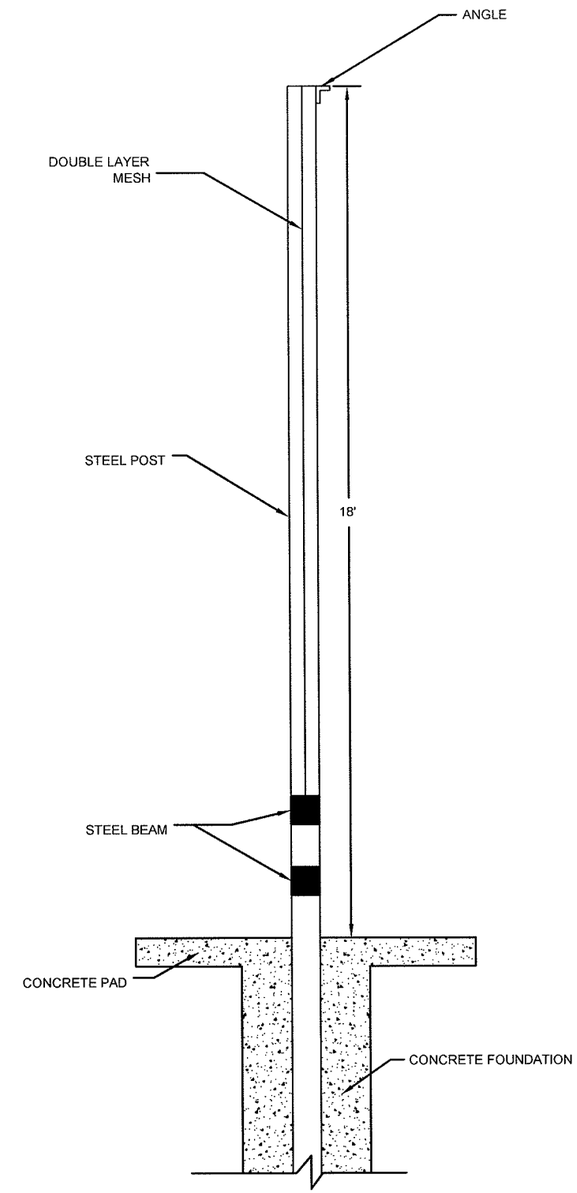

SECTION VIEW A-A

NOTES:

1. THIS IS A SCHEMATIC DRAWING ONLY. FENCE SHALL BE DESIGNED AS NECESSARY FOR THE INDIVIDUAL SITE CONDITIONS / REQUIREMENTS.

US Army Corps of Engineers
Fort Worth District

Mark	Description	Date	Appr.

SCHEMATIC NOT FOR CONSTRUCTION

Baker
MICHAEL BAKER JR., INC.
2929 NORTH CENTRAL AVENUE
SUITE 800
PHOENIX, AZ 85012

Designed by: RB	Date:	Rev: X
Dwn by: JN	Ckd by: TEQ	Submitted by: Michael Baker Jr., Inc.
Reviewed by: DJL		Plot date: 4/3/08
		Baker Project No: 112319

PF225 CONCEPTUAL FENCE DETAILS

DRAINAGE CROSSING FENCE

SHEET REFERENCE NUMBER:
DC-1

i:\projects\usace\pf225\drawings\pf225dc-1.dwg